VK Brochure di 13e

Evaporative Cooler

for Closed Circuit Operation

Operation of a Closed Circuit Cooler

The water which is to be cooled, primary circuit, flows via an inlet in the top header into a coil-system and leaves it at the bottom through a manifold. The water is then available to cool a load (e.g. condenser, automatic injection-mouding machine for plastic processing, etc.). Because a closed water circuit is used, which of course, has to be provided with an expansion tank, there are no water losses in the primary circuit and the water is always clean, preventing deposits or corrosion.

During the water re-cooling of the primary circuit, the external surface of the coil, housed in the closed circuit cooler, must be sprayed with water from the secondary circuit. Fresh air, blown in from below, simultaneously and in counterflow with the sprayed water, heats and becomes saturated in contact with the water and with the wetted coil, and flows out at the top. Re-cooled water of the secondary circuit collects in the pan, and is recycled for the spraying function.

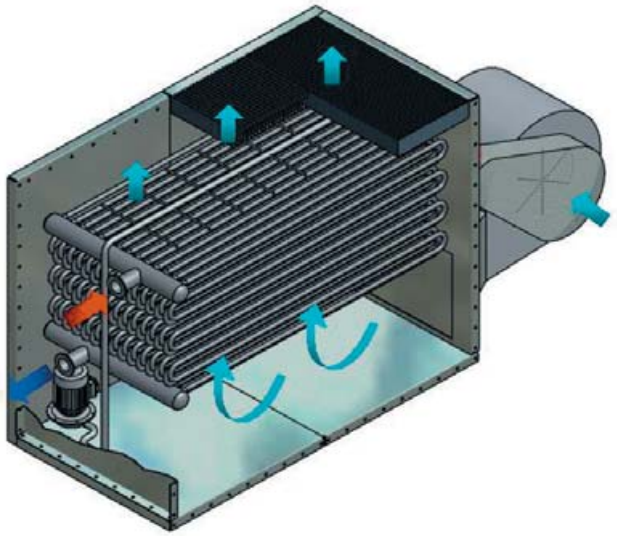

Because a certain quantity of water is evaporated and also a certain portion is bled-off (for this purpose, all units are equipped with an automatic bleed off device), fresh water must be supplied through a ball valve. Nevertheless, the water saving is considerable compared with conventional water cooling, and generally amounts for a figure up to 85 % – 96 %.

Any scaling, up to a thickness of 1 mm, forming on the external surface of the coil, and this in fact can be largely avoided if suitable treatment of the secondary water and correct adjustment of the bleed water flow is carried out, have virtually no effect on the performance of the equipment, as a result of the increased surface area. It is possible to clean a coil using chemicals (obtainable from specialist firms).

Application

Closed circuit coolers are especially advantageous in situations where a machine requires clean water which does not form deposits nor is corrosive.

Any ordinary cooling tower for open circuit can be replaced by a closed circuit cooler. More space and a higher price are, however, inevitable, but it`s superior performance with low maintenance cost make it most attractive for the user.

VDMA Arbeitskreis Kühltürme

GOHL® Permanently Good Cooling

500/1009

E. W. Gohl GmbH | Pfaffenhäule 28 | D-78224 Singen | Tel. +49 (0) 77 31 . 88 06 - 0 | Fax +49 (0) 77 31 . 88 06 - 99 | info@gohl.de | www.gohl.de

Table 1 Technical Data

Number of fans	Unit size	Nominal cooling capacity (with a correction factor of k_1 = 1,0 and the nominal water quantity) Q_N	Nominal water flow rate (primary circuit) k_2 = 1,0 G_N	Attached pump of secondary circuit E-Motor	Air volume	Centrifugal fan selected for an external pressure of: 0 to 40 pa				40 to 80 pa				80 to 130 pa			
						absorbed power	fan revolutions	E-Motor (1500 min^{-1})	sound pressure at 3 m	absorbed power	fan revolutions	E-Motor (1500 min^{-1})	sound pressure at 3 m	absorbed power	fan revolutions	E-Motor (1500 min^{-1})	sound pressure at 3 m
		kW	kg/h	kW	m³/h	kW	min^{-1}	kW	dB(A)	kW	min^{-1}	kW	dB(A)	kW	min^{-1}	kW	dB(A)
1	8/5	64	14000	0,75	5200	0,9	956	1,1	60	1,0	1026	1,5	61	1,1	1086	1,5	61
	8/6	71	14000	0,75	5350	1,0	1000	1,5	61	1,1	1070	1,5	62	1,3	1126	1,5	62
	8/7	77	14000	0,75	5460	1,1	1040	1,5	62	1,3	1090	1,5	63	1,5	1150	2,2	63
	12/5	85	14000	0,75	6700	1,2	770	1,5	62	1,3	830	1,5	63	1,4	880	2,2	63
	12/6	94	14000	0,75	6900	1,3	820	1,5	63	1,4	870	2,2	64	1,5	910	2,2	64
	12/7	101	14000	0,75	7100	1,5	860	2,2	64	1,6	910	2,2	65	1,7	940	2,2	65
	16/5	142	14000	1,1	10500	2,6	900	3,0	64	2,7	930	4,0	64	2,9	960	4,0	65
	16/6	155	14000	1,1	10800	3,0	960	4,0	65	3,1	990	4,0	65	3,3	1040	4,0	66
	16/7	165	14000	1,1	11100	3,4	1010	4,0	66	3,6	1040	5,5	66	3,8	1100	5,5	67
	26/5	224	14000	1,1	16000	3,8	786	5,5	66	4,0	820	5,5	66	4,2	856	5,5	67
	26/6	242	14000	1,1	16000	4,0	820	5,5	67	4,2	850	5,5	67	4,4	880	5,5	68
	26/7	252	14000	1,1	16000	4,2	850	5,5	68	4,4	880	5,5	68	4,6	940	5,5	69
	33/5	289	28000	2,2	20000	3,3	470	4,0	69	3,7	500	5,5	69	4,1	530	5,5	70
	33/6	318	28000	2,2	20600	3,9	516	5,5	70	4,3	546	5,5	70	4,7	576	5,5	71
	33/7	338	28000	2,2	21100	4,6	560	5,5	71	4,9	590	7,5	71	5,3	630	7,5	72
	45/5	368	28000	2,2	26000	5,0	480	7,5	70	5,3	510	7,5	70	5,7	540	7,5	71
	45/6	401	28000	2,2	26800	5,9	516	7,5	71	6,3	540	7,5	71	6,7	570	11,0	72
	45/7	424	28000	2,2	27600	7,0	550	11,0	72	7,6	580	11,0	72	8,0	610	11,0	73
	52/5	435	28000	2,2	31000	6,8	480	11,0	71	7,2	500	11,0	71	7,7	520	11,0	72
	52/6	473	28000	2,2	31900	8,1	520	11,0	72	8,5	540	11,0	72	9,0	560	11,0	73
	52/7	495	28000	2,2	32700	9,8	550	15,0	73	10,2	570	15,0	73	10,7	590	15,0	74
	77/5	555	28000	2,2	42000	9,4	416	11,0	72	10,0	436	15,0	72	10,7	450	15,0	73
	77/6	600	28000	2,2	42000	10,0	436	15,0	73	10,5	460	15,0	73	11,1	470	15,0	74
	77/7	630	28000	2,2	42000	10,6	460	15,0	74	11,0	470	15,0	74	11,5	490	15,0	75
2	2/33/5	578	56000	3,0	40000	6,6	470	11,0	71	7,4	500	11,0	71	8,2	530	11,0	72
	2/33/6	636	56000	3,0	41200	7,8	516	11,0	72	8,6	546	11,0	72	9,4	576	11,0	73
	2/33/7	676	56000	3,0	42200	9,2	560	11,0	73	9,8	590	15,0	73	10,6	630	15,0	74
	2/45/5	736	56000	3,0	52000	10,0	480	15,0	72	10,6	510	15,0	72	11,4	540	15,0	73
	2/45/6	802	56000	3,0	53600	11,8	516	15,0	73	12,6	540	15,0	73	13,4	570	18,5	74
	2/45/7	848	56000	3,0	55200	14,0	550	18,5	74	15,2	580	18,5	74	16,0	610	18,5	75
	2/52/5	870	56000	3,0	62000	13,6	480	18,5	73	14,2	500	18,5	73	15,4	520	18,5	74
	2/52/6	946	56000	3,0	63800	16,2	520	18,5	74	17,0	540	22,0	74	18,0	560	22,0	75
	2/52/7	990	56000	3,0	65400	19,6	550	30,0	75	20,4	570	30,0	75	21,4	590	30,0	76
	2/77/5	1110	56000	3,0	84000	18,8	416	22,0	74	20,0	436	30,0	74	21,4	450	30,0	75
	2/77/6	1200	56000	3,0	84000	20,0	436	30,0	75	21,0	460	30,0	75	22,2	470	30,0	76
	2/77/7	1260	56000	3,0	84000	21,2	460	30,0	76	22,0	470	30,0	76	23,0	490	30,0	77
3	3/45/5	1104	84000	2,2+3,0	78000	15,0	480	18,5	73	15,9	510	18,5	73	17,1	540	22,0	74
	3/45/6	1203	84000	2,2+3,0	80400	17,7	516	22,0	74	18,9	540	22,0	74	20,1	570	30,0	75
	3/45/7	1272	84000	2,2+3,0	82800	21,0	550	30,0	75	22,8	580	30,0	75	24,0	610	30,0	76
	3/52/5	1305	84000	2,2+3,0	93000	20,4	480	30,0	74	21,6	500	30,0	74	23,1	520	30,0	75
	3/52/6	1419	84000	2,2+3,0	95700	24,3	520	30,0	75	25,5	540	30,0	75	27,0	560	30,0	76
	3/52/7	1485	84000	2,2+3,0	98100	29,4	550	37,0	76	30,6	570	37,0	76	32,1	590	37,0	77
	3/77/5	1665	84000	2,2+3,0	126000	28,2	416	37,0	75	30,0	436	37,0	75	32,1	450	37,0	76
	3/77/6	1800	84000	2,2+3,0	126000	30,0	436	37,0	76	31,5	460	37,0	76	33,3	470	37,0	77
	3/77/7	1890	84000	2,2+3,0	126000	31,8	460	37,0	77	33,0	470	37,0	77	34,5	490	45,0	78
4	4/77/5	2220	112000	2x3,0	168000	37,6	416	2x22,0	76	40,0	436	2x30,0	76	42,8	450	2x30,0	77
	4/77/6	2400	112000	2x3,0	168000	40,0	436	2x30,0	77	42,0	460	2x30,0	77	44,4	470	2x30,0	78
	4/77/7	2520	112000	2x3,0	168000	42,4	460	2x30,0	78	44,0	470	2x30,0	78	46,0	490	2x30,0	79
5	5/77/5	2775	140000	2x3,0+2,2	210000	47,0	416	22,0+37,0	77	50,0	436	30,0+37,0	77	53,5	450	30,0+37,0	78
	5/77/6	3000	140000	2x3,0+2,2	210000	50,0	436	30,0+37,0	78	52,5	460	30,0+37,0	78	55,5	470	30,0+37,0	79
	5/77/7	3150	140000	2x3,0+2,2	210000	53,0	460	30,0+37,0	79	55,0	470	30,0+37,0	79	57,5	490	30,0+45,0	80
6	6/77/5	3330	168000	3x3,0	252000	56,4	416	2x37,0	77	60,0	436	2x37,0	77	64,2	450	2x37,0	78
	6/77/6	3600	168000	3x3,0	252000	60,0	436	2x37,0	78	63,0	460	2x37,0	78	66,6	470	2x37,0	79
	6/77/7	3780	168000	3x3,0	252000	63,6	460	2x37,0	79	66,0	470	2x37,0	79	69,0	490	2x45,0	80

Selection advice: Units with 5 as last number – low absorbed power
Units with 7 as last number – require less space at lower initial cost

130 to 180 pa				Permissible water flow rate (primary circuit)		Coil-system		Overall dimensions (with water connections the units are 250 mm longer)			Weights empty weight ~ shipping weight operating weight water level = 230 mm max. weight water level up to overflow			Weight and dimensions of largest single part (coil)			
absorbed power	fan revolutions	E-Motor (1500 min-1)	sound pressure at 3 m	maximum	minimum	Surface area	Water in the coil	Length	Width	Height	Empty weight	Operation weight	max. weight	Weight	Length	Width	Height
kW	min-1	kW	dB(A)	kg/h	kg/h	m²	kg	mm	mm	mm	kg	kg	kg	kg	mm	mm	mm
1,2	1136	1,5	62	65.000	4.200	13	67	1500	686	2090	650	810	850	440	1050	600	1120
1,4	1170	2,2	63	65.000	4.200	15,5	80	1500	686	2270	720	890	930	520	1050	600	1300
1,7	1230	2,2	64	65.000	4.200	18	94	1500	686	2450	790	970	1010	600	1050	600	1480
1,5	920	2,2	64	65.000	4.200	17	85	1865	686	2090	780	990	1040	570	1300	600	1120
1,6	940	2,2	65	65.000	4.200	20,5	100	1865	686	2270	870	1100	1150	680	1300	600	1300
1,8	990	2,2	66	65.000	4.200	24	115	1865	686	2450	960	1210	1260	790	1300	600	1480
3,1	1000	4,0	65	65.000	4.200	30	135	2540	686	2090	1150	1480	1560	680	1970	600	1120
3,5	1070	4,0	66	65.000	4.200	35,5	160	2540	686	2270	1290	1650	1730	800	1970	600	1300
4,0	1160	5,5	67	65.000	4.200	41	185	2540	686	2450	1430	1820	1900	920	1970	600	1480
4,5	896	5,5	67	65.000	4.200	46	200	3555	686	2090	1670	2170	2280	980	2900	600	1120
4,7	920	5,5	68	65.000	4.200	55	240	3555	686	2270	1880	2420	2530	1160	2900	600	1300
4,9	1000	7,5	69	65.000	4.200	64	285	3555	686	2450	2090	2670	2780	1340	2900	600	1480
4,6	576	5,5	70	130.000	8.400	60	275	3343	1256	2090	2130	2780	2920	1280	1970	1170	1120
5,2	616	7,5	71	130.000	8.400	71	325	3343	1256	2270	2400	3100	3240	1500	1970	1170	1300
5,8	660	7,5	72	130.000	8.400	82	375	3343	1256	2450	2670	3420	3560	1720	1970	1170	1480
6,2	580	7,5	71	130.000	8.400	77	350	3843	1256	2090	2560	3390	3580	1580	2470	1170	1120
7,2	600	11,0	72	130.000	8.400	92	415	3843	1256	2270	2890	3780	3970	1840	2470	1170	1300
8,5	640	11,0	73	130.000	8.400	107	485	3843	1256	2450	3220	4170	4360	2100	2470	1170	1480
8,3	550	11,0	72	130.000	8.400	92	405	4266	1256	2090	2960	3940	4160	1880	2900	1170	1120
9,6	590	11,0	73	130.000	8.400	110	485	4266	1256	2270	3350	4410	4630	2200	2900	1170	1300
11,3	620	15,0	74	130.000	8.400	128	570	4266	1256	2450	3740	4880	5100	2520	2900	1170	1480
11,4	480	15,0	73	130.000	8.400	116	520	5216	1256	2180	3750	5000	5280	2360	3650	1170	1120
11,7	490	15,0	74	130.000	8.400	138	620	5216	1256	2360	4280	5630	5910	2780	3650	1170	1300
12,0	516	15,0	75	130.000	8.400	160	720	5216	1256	2540	4810	6260	6540	3200	3650	1170	1480
9,2	576	11,0	72	260.000	16.800	120	550	3343	2429	2090	4050	5350	5630	1280	1970	1170	1120
10,4	616	15,0	73	260.000	16.800	142	650	3343	2429	2270	4580	5980	6260	1500	1970	1170	1300
11,6	660	15,0	74	260.000	16.800	164	750	3343	2429	2450	5110	6610	6890	1720	1970	1170	1480
12,4	580	15,0	73	260.000	16.800	154	700	3843	2429	2090	4940	6600	6970	1580	2470	1170	1120
14,4	600	18,5	74	260.000	16.800	184	830	3843	2429	2270	5580	7370	7740	1840	2470	1170	1300
17,0	640	22,0	75	260.000	16.800	214	970	3843	2429	2450	6220	8140	8510	2100	2470	1170	1480
16,6	550	22,0	74	260.000	16.800	184	810	4266	2429	2090	5720	7660	8100	1880	2900	1170	1120
19,2	590	22,0	75	260.000	16.800	220	970	4266	2429	2270	6480	8580	9020	2200	2900	1170	1300
22,6	620	30,0	76	260.000	16.800	256	1140	4266	2429	2450	7240	9500	9940	2520	2900	1170	1480
22,8	480	30,0	75	260.000	16.800	232	1040	5216	2429	2180	7130	9620	10180	2360	3650	1170	1120
23,4	490	30,0	76	260.000	16.800	276	1240	5216	2429	2360	8110	10800	11360	2780	3650	1170	1300
24,0	516	30,0	77	260.000	16.800	320	1440	5216	2429	2540	9090	11980	12540	3200	3650	1170	1480
18,6	580	22,0	74	390.000	25.200	231	1050	3843	3602	2090	7360	9840	10400	1580	2470	1170	1120
21,6	600	30,0	75	390.000	25.200	276	1245	3843	3602	2270	8320	11000	11560	1840	2470	1170	1300
25,5	640	30,0	76	390.000	25.200	321	1455	3843	3602	2450	9280	12160	12720	2100	2470	1170	1480
24,9	550	30,0	75	390.000	25.200	276	1215	4266	3602	2090	8450	11360	12020	1880	2900	1170	1120
28,8	590	37,0	76	390.000	25.200	330	1455	4266	3602	2270	9600	12750	13410	2200	2900	1170	1300
33,9	620	37,0	77	390.000	25.200	384	1710	4266	3602	2450	10750	14140	14800	2520	2900	1170	1480
34,2	480	45,0	76	390.000	25.200	348	1560	5216	3602	2180	10500	14230	15080	2360	3650	1170	1120
35,1	490	45,0	77	390.000	25.200	414	1860	5216	3602	2360	11980	16010	16860	2780	3650	1170	1300
36,0	516	45,0	78	390.000	25.200	480	2160	5216	3602	2540	13460	17790	18640	3200	3650	1170	1480
45,6	480	2x30,0	77	520.000	33.600	464	2080	5216	4775	2180	13880	18860	19980	2360	3650	1170	1120
46,8	490	2x30,0	78	520.000	33.600	552	2480	5216	4775	2360	15790	21170	22290	2780	3650	1170	1300
48,0	516	2x30,0	79	520.000	33.600	640	2880	5216	4775	2540	17700	23480	24600	3200	3650	1170	1480
57,0	480	30,0+45,0	78	650.000	42.000	580	2600	5216	5948	2180	17350	23570	24970	2360	3650	1170	1120
58,5	490	30,0+45,0	79	650.000	42.000	690	3100	5216	5948	2360	19800	26520	27920	2780	3650	1170	1300
60,0	516	30,0+45,0	80	650.000	42.000	800	3600	5216	5948	2540	22250	29470	30870	3200	3650	1170	1480
68,4	480	2x45,0	78	780.000	50.400	696	3120	5216	7121	2180	20360	27820	29510	2360	3650	1170	1120
70,2	490	2x45,0	79	780.000	50.400	828	3720	5216	7121	2360	23280	31340	33030	2780	3650	1170	1300
72,0	516	2x45,0	80	780.000	50.400	960	4320	5216	7121	2540	26200	34860	36550	3200	3650	1170	1480

Table 2 Capacity tables for the most popular conditions

Cooling medium water

For operating conditions which you can´t find in table 2 the unit size must be calculated with correction factors k_1, k_2 and the nominal cooling capacity Q_N of table 1.

Unit size			8/5			8/6			8/7			12/5			12/6			12/7		
Water temperature drop of	Wet-bulb temp. [°C]	Water-temp. [°C]	Operating cooling capacity [kW]	Operating water flow rate [m³/h]	Pressure drop (coil) [bar]	Operating cooling capacity [kW]	Operating water flow rate [m³/h]	Pressure drop (coil) [bar]	Operating cooling capacity [kW]	Operating water flow rate [m³/h]	Pressure drop (coil) [bar]	Operating cooling capacity [kW]	Operating water flow rate [m³/h]	Pressure drop (coil) [bar]	Operating cooling capacity [kW]	Operating water flow rate [m³/h]	Pressure drop (coil) [bar]	Operating cooling capacity [kW]	Operating water flow rate [m³/h]	Pressure drop (coil) [bar]
5K	21	32-27	29,9	5,1	0,01	34,7	6,0	0,01	38,9	6,7	0,02	44,5	7,7	0,02	50,8	8,7	0,03	55,7	9,6	0,04
		33-28	36,2	6,2	0,01	41,5	7,1	0,02	46,2	8,0	0,02	52,6	9,0	0,03	59,7	10,3	0,04	65,2	11,2	0,05
		34-29	42,3	7,3	0,02	48,2	8,3	0,02	53,5	9,2	0,03	60,6	10,4	0,03	68,6	11,8	0,05	74,8	12,9	0,07
		35-30	48,4	8,3	0,02	54,9	9,4	0,03	60,8	10,5	0,04	68,6	11,8	0,04	77,4	13,3	0,06	84,2	14,5	0,08
		36-31	54,5	9,4	0,02	61,6	10,6	0,03	68,0	11,7	0,05	76,6	13,2	0,05	86,3	14,8	0,07	93,8	16,1	0,10
		37-32	60,6	10,4	0,03	68,3	11,7	0,04	75,3	13,0	0,06	84,6	14,6	0,06	95,2	16,4	0,09	103,3	17,8	0,12
		38-33	66,7	11,5	0,03	75,0	12,9	0,05	82,6	14,2	0,07	92,7	15,9	0,07	104,0	17,9	0,10	112,9	19,4	0,14
6K	21	33-27	–	–	–	31,3	4,5	0,01	35,7	5,1	0,01	41,5	5,9	0,01	47,8	6,9	0,02	52,7	7,6	0,03
		34-28	33,7	4,8	0,01	39,2	5,6	0,01	44,1	6,3	0,02	50,6	7,3	0,02	57,9	8,3	0,03	63,5	9,1	0,04
		35-29	40,8	5,8	0,01	46,9	6,7	0,02	52,4	7,5	0,02	59,7	8,6	0,02	67,9	9,7	0,03	74,2	10,6	0,05
		36-30	47,7	6,8	0,01	54,5	7,8	0,02	60,6	8,7	0,03	68,7	9,8	0,03	77,8	11,2	0,04	84,9	12,2	0,06
		37-31	53,9	7,7	0,02	61,2	8,8	0,02	67,9	9,7	0,03	76,7	11,0	0,04	86,7	12,4	0,05	94,5	13,5	0,07
		38-32	59,2	8,5	0,02	67,1	9,6	0,03	74,2	10,6	0,04	83,7	12,0	0,04	94,5	13,5	0,06	102,8	14,7	0,08
7K	21	36-29	39,0	4,8	0,01	45,4	5,6	0,01	51,2	6,3	0,02	58,7	7,2	0,02	67,1	8,2	0,03	73,7	9,1	0,03
		37-30	46,2	5,7	0,01	53,1	6,5	0,01	59,4	7,3	0,02	67,8	8,3	0,02	77,1	9,5	0,03	84,4	10,4	0,04
		38-31	52,4	6,4	0,01	59,9	7,4	0,02	66,7	8,2	0,03	75,8	9,3	0,03	86,0	10,6	0,04	93,9	11,5	0,05
5K	20	32-27	34,6	6,0	0,01	39,8	6,8	0,02	44,4	7,6	0,02	50,6	8,7	0,02	57,5	9,9	0,04	62,8	10,8	0,05
		33-28	40,8	7,0	0,01	46,5	8,0	0,02	51,7	8,9	0,03	58,6	10,1	0,03	66,3	11,4	0,05	72,4	12,4	0,06
		34-29	46,2	7,9	0,02	52,4	9,0	0,03	58,1	10,0	0,04	65,6	11,3	0,04	74,1	12,7	0,06	80,7	13,9	0,08
		35-30	52,2	9,0	0,02	59,1	10,2	0,03	65,3	11,2	0,04	73,6	12,7	0,05	83,0	14,3	0,07	90,2	15,5	0,09
		36-31	58,3	10,0	0,03	65,8	11,3	0,04	72,6	12,5	0,05	81,6	14,0	0,06	91,8	15,8	0,08	99,8	17,2	0,11
		37-32	64,4	11,1	0,03	72,5	12,5	0,05	79,8	13,7	0,06	89,7	15,4	0,07	100,7	17,3	0,10	109,3	18,8	0,13
		38-33	70,5	12,1	0,04	79,2	13,6	0,06	87,1	15,0	0,08	97,7	16,8	0,08	109,6	18,8	0,11	118,9	20,4	0,15
6K	20	33-27	32,1	4,6	0,01	37,5	5,4	0,01	42,3	6,1	0,01	48,6	7,0	0,02	55,6	8,0	0,02	61,1	8,8	0,03
		34-28	39,2	5,6	0,01	45,2	6,5	0,01	50,6	7,2	0,02	57,7	8,3	0,02	65,6	9,4	0,03	71,8	10,3	0,04
		35-29	45,4	6,5	0,01	52,0	7,4	0,02	57,9	8,3	0,03	65,7	9,4	0,03	74,5	10,7	0,04	81,4	11,7	0,05
		36-30	51,6	7,4	0,02	58,7	8,4	0,02	65,1	9,3	0,03	73,7	10,6	0,03	83,4	12,0	0,05	90,9	13,0	0,07
		37-31	57,7	8,3	0,02	65,4	9,4	0,03	72,4	10,4	0,04	81,7	11,7	0,04	92,2	13,2	0,06	100,4	14,4	0,08
		38-32	63,8	9,1	0,02	72,1	10,3	0,03	79,7	11,4	0,05	89,7	12,9	0,05	101,1	14,5	0,07	109,9	15,8	0,09
7K	20	36-29	43,8	5,4	0,01	50,6	6,2	0,01	56,7	7,0	0,02	64,8	8,0	0,02	73,8	9,1	0,03	80,8	9,9	0,04
		37-30	50,0	6,1	0,01	57,4	7,0	0,02	64,0	7,9	0,02	72,8	8,9	0,03	82,7	10,2	0,04	90,4	11,1	0,05
		38-31	56,2	6,9	0,01	64,1	7,9	0,02	71,3	8,8	0,03	80,8	9,9	0,03	91,5	11,2	0,04	99,9	12,3	0,06

Unit size			16/5			16/6			16/7			26/5			26/6			26/7		
Water temperature drop of	Wet-bulb temp. [°C]	Water-temp. [°C]	Operating cooling capacity [kW]	Operating water flow rate [m³/h]	Pressure drop (coil) [bar]	Operating cooling capacity [kW]	Operating water flow rate [m³/h]	Pressure drop (coil) [bar]	Operating cooling capacity [kW]	Operating water flow rate [m³/h]	Pressure drop (coil) [bar]	Operating cooling capacity [kW]	Operating water flow rate [m³/h]	Pressure drop (coil) [bar]	Operating cooling capacity [kW]	Operating water flow rate [m³/h]	Pressure drop (coil) [bar]	Operating cooling capacity [kW]	Operating water flow rate [m³/h]	Pressure drop (coil) [bar]
5K	21	32-27	84,2	14,5	0,08	93,3	16,0	0,11	100,2	17,2	0,14	141,4	24,3	0,29	154,0	26,5	0,37	161,0	27,7	0,45
		33-28	97,6	16,8	0,11	107,9	18,6	0,14	115,8	19,9	0,18	162,6	28,0	0,37	176,9	30,4	0,48	184,9	31,8	0,57
		34-29	111,0	19,1	0,13	122,6	21,1	0,18	131,4	22,6	0,23	183,9	31,6	0,47	199,9	34,4	0,60	208,8	35,9	0,72
		35-30	124,5	21,4	0,16	137,2	23,6	0,22	147,1	25,3	0,28	205,1	35,3	0,57	222,8	38,3	0,73	232,7	40,0	0,87
		36-31	137,9	23,7	0,20	151,9	26,1	0,27	162,7	28,0	0,34	226,4	38,9	0,68	245,8	42,3	0,88	256,6	44,1	1,04
		37-32	151,4	26,0	0,23	166,6	28,7	0,31	178,3	30,7	0,40	247,6	42,6	0,81	268,8	46,2	1,03	280,5	48,3	1,23
		38-33	164,8	28,3	0,27	181,3	31,2	0,37	194,0	33,4	0,46	268,9	46,3	0,94	291,8	50,2	1,20	304,5	52,4	1,43
6K	21	33-27	81,3	11,7	0,05	90,3	12,9	0,07	97,3	13,9	0,09	138,4	19,8	0,20	151,0	21,6	0,26	157,9	22,6	0,31
		34-28	96,4	13,8	0,07	106,8	15,3	0,10	114,8	16,5	0,13	162,2	23,3	0,27	176,7	25,3	0,35	184,8	26,5	0,41
		35-29	111,4	16,0	0,10	123,3	17,7	0,13	132,4	19,0	0,17	186,1	26,7	0,34	202,5	29,0	0,44	211,7	30,3	0,53
		36-30	126,5	18,1	0,12	139,7	20,0	0,16	149,9	21,5	0,21	210,0	30,1	0,43	228,4	32,7	0,55	238,6	34,2	0,66
		37-31	140,0	20,1	0,15	154,4	22,1	0,20	165,5	23,7	0,25	231,3	33,1	0,51	251,3	36,0	0,66	262,5	37,6	0,78
		38-32	151,7	21,7	0,17	167,2	24,0	0,23	179,2	25,7	0,29	249,9	35,8	0,59	271,4	38,9	0,75	283,4	40,6	0,90
7K	21	36-29	111,9	13,7	0,07	124,0	15,2	0,10	133,3	16,4	0,13	188,4	23,1	0,27	205,2	25,2	0,34	214,6	26,4	0,41
		37-30	126,9	15,6	0,09	140,4	17,3	0,12	150,8	18,5	0,16	212,3	26,1	0,33	231,0	28,4	0,43	241,5	29,7	0,51
		38-31	140,3	17,2	0,11	155,1	19,1	0,15	166,4	20,4	0,19	233,5	28,7	0,39	254,0	31,2	0,51	265,4	32,6	0,60
5K	20	32-27	94,3	16,2	0,10	104,2	17,9	0,13	111,9	19,3	0,17	157,3	27,1	0,35	171,2	29,4	0,45	178,9	30,8	0,54
		33-28	107,7	18,5	0,13	118,9	20,4	0,17	127,5	21,9	0,22	178,5	30,7	0,44	194,1	33,4	0,57	202,8	34,9	0,68
		34-29	119,4	20,5	0,15	131,7	22,7	0,21	141,2	24,3	0,26	197,1	33,9	0,53	214,2	36,8	0,68	223,7	38,5	0,81
		35-30	132,9	22,9	0,18	146,4	25,2	0,25	156,8	27,0	0,32	218,4	37,6	0,64	237,2	40,8	0,82	247,6	42,6	0,98
		36-31	146,3	25,2	0,22	161,1	27,7	0,30	172,5	29,7	0,38	239,7	41,2	0,76	260,2	44,8	0,97	271,6	46,7	1,16
		37-32	159,8	27,5	0,26	175,8	30,2	0,35	188,1	32,4	0,44	260,9	44,9	0,89	283,2	48,7	1,14	295,5	50,8	1,35
		38-33	173,2	29,8	0,30	190,5	32,8	0,40	203,8	35,1	0,51	282,2	48,5	1,02	306,1	52,7	1,31	319,4	54,9	1,56
6K	20	33-27	93,0	13,3	0,07	103,1	14,8	0,09	110,9	15,9	0,12	156,9	22,5	0,25	171,0	24,5	0,33	178,8	25,6	0,39
		34-28	108,1	15,5	0,09	119,6	17,1	0,12	128,5	18,4	0,16	180,8	25,9	0,33	196,8	28,2	0,42	205,7	29,5	0,50
		35-29	121,5	17,4	0,11	134,2	19,2	0,15	144,1	20,6	0,19	202,0	29,0	0,40	219,8	31,5	0,51	229,6	32,9	0,61
		36-30	134,9	19,3	0,14	148,9	21,3	0,18	159,7	22,9	0,23	223,3	32,0	0,48	242,7	34,8	0,62	253,5	36,3	0,73
		37-31	148,3	21,3	0,16	163,6	23,4	0,22	175,3	25,1	0,28	244,5	35,1	0,56	265,7	38,1	0,73	277,4	39,8	0,86
		38-32	161,8	23,2	0,19	178,3	25,6	0,26	190,9	27,4	0,32	265,8	38,1	0,66	288,7	41,4	0,84	301,4	43,2	1,00
7K	20	36-29	121,9	15,0	0,09	135,0	16,6	0,12	145,0	17,8	0,15	204,3	25,1	0,31	222,4	27,3	0,40	232,5	28,6	0,47
		37-30	135,3	16,6	0,10	149,6	18,4	0,14	160,6	19,7	0,18	225,5	27,7	0,37	245,4	30,1	0,47	256,4	31,5	0,57
		38-31	148,7	18,3	0,12	164,3	20,2	0,17	176,2	21,6	0,21	246,8	30,3	0,43	268,3	33,0	0,56	280,3	34,4	0,66

Only the single fan unit capacity data have been printed. For multi fan units multiply the capacity by the number of fans.

Table 2 Capacity tables for the most popular conditions

Cooling medium water

For operating conditions which you can´t find in table 2 the unit size must be calculated with correction factors k_1, k_2 and the nominal cooling capacity Q_N of table 1.

Unit size			33/5			33/6			33/7			45/5			45/6			45/7		
Water temperature drop of	Wet-bulb temp. [°C]	Water-temp. [°C]	Operating cooling capacity [kW]	Operating water flow rate [m³/h]	Pressure drop (coil) [bar]	Operating cooling capacity [kW]	Operating water flow rate [m³/h]	Pressure drop (coil) [bar]	Operating cooling capacity [kW]	Operating water flow rate [m³/h]	Pressure drop (coil) [bar]	Operating cooling capacity [kW]	Operating water flow rate [m³/h]	Pressure drop (coil) [bar]	Operating cooling capacity [kW]	Operating water flow rate [m³/h]	Pressure drop (coil) [bar]	Operating cooling capacity [kW]	Operating water flow rate [m³/h]	Pressure drop (coil) [bar]
5K	21	32-27	171,9	29,6	0,08	192,1	33,0	0,11	206,0	35,4	0,15	226,9	39,0	0,15	250,0	43,0	0,21	266,0	45,8	0,26
		33-28	199,2	34,3	0,11	222,1	38,2	0,15	238,0	40,9	0,19	261,8	45,0	0,20	287,9	49,5	0,27	306,2	52,7	0,34
		34-29	226,5	39,0	0,14	252,2	43,4	0,19	270,0	46,4	0,24	296,6	51,0	0,25	325,9	56,1	0,34	346,4	59,6	0,42
		35-30	253,8	43,7	0,17	282,3	48,6	0,23	302,0	51,9	0,29	331,5	57,0	0,31	364,0	62,6	0,41	386,6	66,5	0,52
		36-31	281,2	48,4	0,20	312,5	53,7	0,27	334,0	57,5	0,35	366,4	63,0	0,37	402,0	69,1	0,49	426,8	73,4	0,62
		37-32	308,6	53,1	0,24	342,6	58,9	0,33	366,1	63,0	0,41	401,3	69,0	0,43	440,1	75,7	0,58	467,1	80,3	0,73
		38-33	336,0	57,8	0,28	372,8	64,1	0,38	398,2	68,5	0,48	436,2	75,0	0,50	478,1	82,2	0,67	507,3	87,3	0,85
6K	21	33-27	166,1	23,8	0,06	186,2	26,7	0,08	200,2	28,7	0,10	221,0	31,7	0,11	244,0	35,0	0,14	260,0	37,3	0,18
		34-28	196,7	28,2	0,08	220,0	31,5	0,10	236,0	33,8	0,13	260,1	37,3	0,14	286,7	41,1	0,19	305,2	43,7	0,24
		35-29	227,4	32,6	0,10	253,8	36,4	0,14	272,0	39,0	0,17	299,3	42,9	0,18	329,4	47,2	0,25	350,3	50,2	0,31
		36-30	258,1	37,0	0,12	287,6	41,2	0,17	308,0	44,1	0,22	338,5	48,5	0,23	372,1	53,3	0,31	395,5	56,7	0,39
		37-31	285,5	40,9	0,15	317,7	45,5	0,20	340,0	48,7	0,26	373,4	53,5	0,27	410,1	58,8	0,37	435,8	62,5	0,46
		38-32	309,4	44,3	0,17	344,1	49,3	0,24	368,0	52,7	0,30	403,9	57,9	0,31	443,4	63,6	0,42	471,0	67,5	0,53
7K	21	36-29	228,4	28,1	0,08	255,4	31,4	0,10	274,1	33,7	0,13	302,1	37,1	0,14	332,9	40,9	0,19	354,4	43,5	0,24
		37-30	259,1	31,8	0,09	289,2	35,5	0,13	310,0	38,1	0,17	341,2	41,9	0,17	375,6	46,1	0,24	399,5	49,1	0,30
		38-31	286,4	35,2	0,11	319,3	39,2	0,15	342,0	42,0	0,20	376,0	46,2	0,21	413,5	50,8	0,28	439,7	54,0	0,35
5K	20	32-27	192,4	33,1	0,10	214,6	36,9	0,14	230,0	39,6	0,18	253,0	43,5	0,19	278,4	47,9	0,25	296,1	50,9	0,32
		33-28	219,7	37,8	0,13	244,7	42,1	0,18	262,0	45,1	0,23	287,9	49,5	0,24	316,4	54,4	0,32	336,3	57,8	0,40
		34-29	243,6	41,9	0,16	271,0	46,6	0,21	290,0	49,9	0,27	318,4	54,8	0,28	349,7	60,1	0,38	371,5	63,9	0,48
		35-30	270,9	46,6	0,19	301,2	51,8	0,26	322,0	55,4	0,33	353,3	60,8	0,34	387,7	66,7	0,46	411,7	70,8	0,58
		36-31	298,3	51,3	0,23	331,3	57,0	0,31	354,1	60,9	0,39	388,2	66,8	0,41	425,8	73,2	0,55	452,0	77,7	0,69
		37-32	325,7	56,0	0,26	361,5	62,2	0,36	386,1	66,4	0,46	423,1	72,8	0,48	463,9	79,8	0,64	492,2	84,7	0,80
		38-33	353,1	60,7	0,31	391,6	67,4	0,41	418,2	71,9	0,53	458,1	78,8	0,55	501,9	86,3	0,74	532,5	91,6	0,93
6K	20	33-27	189,9	27,2	0,07	212,5	30,5	0,10	228,1	32,7	0,13	251,4	36,0	0,13	277,2	39,7	0,18	295,1	42,3	0,23
		34-28	220,6	31,6	0,09	246,3	35,3	0,13	264,0	37,8	0,16	290,6	41,7	0,17	319,9	45,8	0,23	340,3	48,8	0,29
		35-29	247,9	35,5	0,12	276,3	39,6	0,16	296,0	42,4	0,20	325,4	46,6	0,21	357,9	51,3	0,29	380,5	54,5	0,36
		36-30	275,2	39,4	0,14	306,4	43,9	0,19	328,0	47,0	0,24	360,3	51,6	0,26	395,9	56,7	0,34	420,7	60,3	0,43
		37-31	302,6	43,4	0,17	336,5	48,2	0,23	360,0	51,6	0,29	395,2	56,6	0,30	433,9	62,2	0,40	460,9	66,1	0,51
		38-32	329,9	47,3	0,19	366,7	52,6	0,26	392,0	56,2	0,34	430,1	61,6	0,35	471,9	67,6	0,47	501,1	71,8	0,60
7K	20	36-29	248,8	30,6	0,09	277,9	34,1	0,12	298,0	36,6	0,15	328,1	40,3	0,16	361,3	44,4	0,22	384,5	47,2	0,28
		37-30	276,1	33,9	0,11	308,0	37,8	0,15	330,0	40,5	0,19	363,0	44,6	0,20	399,3	49,1	0,26	424,6	52,2	0,33
		38-31	303,4	37,3	0,13	338,1	41,5	0,17	362,0	44,5	0,22	397,8	48,9	0,23	437,3	53,7	0,31	464,8	57,1	0,39

Unit size			52/5			52/6			52/7			77/5			77/6			77/7		
Water temperature drop of	Wet-bulb temp. [°C]	Water-temp. [°C]	Operating cooling capacity [kW]	Operating water flow rate [m³/h]	Pressure drop (coil) [bar]	Operating cooling capacity [kW]	Operating water flow rate [m³/h]	Pressure drop (coil) [bar]	Operating cooling capacity [kW]	Operating water flow rate [m³/h]	Pressure drop (coil) [bar]	Operating cooling capacity [kW]	Operating water flow rate [m³/h]	Pressure drop (coil) [bar]	Operating cooling capacity [kW]	Operating water flow rate [m³/h]	Pressure drop (coil) [bar]	Operating cooling capacity [kW]	Operating water flow rate [m³/h]	Pressure drop (coil) [bar]
5K	21	32-27	273,7	47,1	0,31	300,2	51,6	0,33	315,6	54,3	0,32	357,6	61,5	0,45	389,1	66,9	0,59	410,1	70,5	0,74
		33-28	314,9	54,2	0,40	345,1	59,4	0,42	362,6	62,4	0,41	410,2	70,6	0,58	446,0	76,7	0,76	469,9	80,8	0,95
		34-29	356,2	61,3	0,51	390,0	67,1	0,53	409,5	70,4	0,51	462,9	79,6	0,72	503,0	86,5	0,95	529,7	91,1	1,18
		35-30	397,4	68,4	0,62	434,8	74,8	0,64	456,5	78,5	0,62	515,6	88,7	0,87	560,0	96,3	1,15	589,5	101,4	1,43
		36-31	438,7	75,5	0,74	479,8	82,5	0,77	503,5	86,6	0,74	568,3	97,8	1,04	616,9	106,1	1,37	649,3	111,7	1,71
		37-32	480,0	82,6	0,87	524,7	90,2	0,90	550,5	94,7	0,87	621,0	106,8	1,23	673,9	115,9	1,61	709,1	122,0	2,01
		38-33	521,3	89,7	1,01	569,6	98,0	1,05	597,5	102,8	1,01	673,7	115,9	1,42	730,8	125,7	1,87	–	–	–
6K	21	33-27	267,7	38,4	0,22	294,2	42,2	0,23	309,6	44,4	0,22	351,5	50,4	0,31	382,9	54,9	0,41	403,9	57,9	0,52
		34-28	314,0	45,0	0,29	344,6	49,4	0,30	362,3	51,9	0,29	410,7	58,9	0,41	447,0	64,1	0,55	471,1	67,5	0,68
		35-29	360,4	51,7	0,37	395,0	56,6	0,39	415,1	59,5	0,37	469,9	67,4	0,53	511,0	73,2	0,70	538,4	77,2	0,87
		36-30	406,8	58,3	0,46	445,5	63,9	0,48	467,9	67,1	0,46	529,2	75,8	0,66	575,1	82,4	0,87	605,7	86,8	1,08
		37-31	448,0	64,2	0,55	490,4	70,3	0,57	514,9	73,8	0,55	581,9	83,4	0,78	632,1	90,6	1,03	665,5	95,4	1,28
		38-32	484,1	69,4	0,63	529,7	75,9	0,66	556,0	79,7	0,64	628,0	90,0	0,90	681,9	97,7	1,18	717,9	102,9	1,47
7K	21	36-29	364,6	44,8	0,29	400,2	49,2	0,30	420,8	51,7	0,29	476,9	58,6	0,41	519,1	63,8	0,54	547,2	67,2	0,68
		37-30	411,0	50,5	0,36	450,6	55,4	0,37	473,5	58,2	0,36	536,2	65,9	0,51	583,1	71,6	0,67	614,5	75,5	0,84
		38-31	452,2	55,6	0,42	495,5	60,9	0,44	520,5	63,9	0,43	588,8	72,3	0,60	640,1	78,6	0,80	674,3	82,8	0,99
5K	20	32-27	304,6	52,4	0,38	333,9	57,4	0,40	350,8	60,3	0,38	397,1	68,3	0,54	431,8	74,3	0,72	454,9	78,2	0,89
		33-28	345,8	59,5	0,48	378,7	65,1	0,50	397,8	68,4	0,48	449,8	77,4	0,68	488,7	84,1	0,90	514,7	88,5	1,12
		34-29	381,9	65,7	0,57	418,0	71,9	0,60	438,9	75,5	0,58	495,9	85,3	0,81	538,6	92,6	1,07	567,1	97,5	1,33
		35-30	423,2	72,8	0,69	462,9	79,6	0,72	485,9	83,6	0,69	548,6	94,4	0,98	595,6	102,4	1,29	626,9	107,8	1,60
		36-31	464,5	79,9	0,82	507,8	87,3	0,85	532,9	91,7	0,82	601,3	103,4	1,16	652,5	112,2	1,52	686,7	118,1	1,89
		37-32	505,8	87,0	0,96	552,7	95,1	0,99	579,9	99,7	0,96	653,9	112,5	1,35	709,5	122,0	1,77	746,5	128,4	2,20
		38-33	547,1	94,1	1,10	597,6	102,8	1,14	626,9	107,8	1,10	706,6	121,5	1,55	–	–	–	–	–	–
6K	20	33-27	303,7	43,5	0,27	333,4	47,8	0,28	350,6	50,3	0,27	397,5	57,0	0,39	432,7	62,0	0,52	456,2	65,4	0,64
		34-28	350,1	50,2	0,35	383,8	55,0	0,37	403,4	57,8	0,35	456,7	65,5	0,50	496,8	71,2	0,66	523,5	75,0	0,83
		35-29	391,3	56,1	0,43	428,7	61,4	0,45	450,3	64,5	0,43	509,4	73,0	0,61	553,7	79,4	0,81	583,3	83,6	1,01
		36-30	432,5	62,0	0,52	473,6	67,9	0,54	497,3	71,3	0,52	562,1	80,6	0,73	610,7	87,5	0,97	643,1	92,2	1,20
		37-31	473,8	67,9	0,61	518,4	74,3	0,63	544,3	78,0	0,61	614,8	88,1	0,86	667,7	95,7	1,14	702,9	100,8	1,42
		38-32	515,1	73,8	0,71	563,4	80,7	0,74	591,3	84,8	0,71	667,5	95,7	1,00	724,6	103,9	1,32	762,7	109,3	1,64
7K	20	36-29	395,5	48,6	0,33	433,8	53,3	0,35	455,9	56,0	0,33	516,4	63,4	0,48	561,8	69,0	0,63	592,0	72,7	0,78
		37-30	436,8	53,7	0,40	478,6	58,8	0,41	502,9	61,8	0,40	569,1	69,9	0,57	618,7	76,0	0,75	651,8	80,1	0,93
		38-31	478,0	58,7	0,47	523,5	64,3	0,49	549,9	67,6	0,47	621,7	76,4	0,67	675,7	83,0	0,88	711,6	87,4	1,09

Only the single fan unit capacity data have been printed. For multi fan units multiply the capacity by the number of fans.

Table 2 Capacity tables for the most popular conditions

Cooling medium water with 35 weight % ethylene glycol

For operating conditions which you can´t find in table 2 the unit size must be calculated with correction factors k_1, k_2 and the nominal cooling capacity Q_N of table 1.

Unit size			8/5			8/6			8/7			12/5			12/6			12/7		
Water temperature drop of	Wet-bulb temp. [°C]	Water-temp. [°C]	Operating cooling capacity [kW]	Operating water flow rate [m³/h]	Pressure drop (coil) [bar]	Operating cooling capacity [kW]	Operating water flow rate [m³/h]	Pressure drop (coil) [bar]	Operating cooling capacity [kW]	Operating water flow rate [m³/h]	Pressure drop (coil) [bar]	Operating cooling capacity [kW]	Operating water flow rate [m³/h]	Pressure drop (coil) [bar]	Operating cooling capacity [kW]	Operating water flow rate [m³/h]	Pressure drop (coil) [bar]	Operating cooling capacity [kW]	Operating water flow rate [m³/h]	Pressure drop (coil) [bar]
5K	21	32-27	–	–	–	25,9	5,0	0,01	31,0	6,0	0,01	37,2	7,2	0,02	43,9	8,4	0,03	48,9	9,4	0,04
		33-28	27,8	5,4	0,01	33,9	6,5	0,01	39,1	7,5	0,02	45,7	8,8	0,03	53,0	10,2	0,04	58,6	11,3	0,05
		34-29	34,9	6,7	0,01	41,1	7,9	0,02	46,7	9,0	0,03	53,9	10,4	0,03	61,9	11,9	0,05	68,2	13,1	0,07
		35-30	41,4	8,0	0,02	48,1	9,3	0,03	54,1	10,4	0,04	62,0	11,9	0,04	70,8	13,6	0,07	77,7	15,0	0,09
		36-31	47,7	9,2	0,02	54,9	10,6	0,04	61,4	11,8	0,05	70,1	13,5	0,06	79,7	15,4	0,08	87,2	16,8	0,11
		37-32	53,9	10,4	0,03	61,7	11,9	0,04	68,7	13,2	0,06	78,1	15,0	0,07	88,6	17,1	0,10	96,8	18,6	0,13
		38-33	60,0	11,6	0,04	68,4	13,2	0,05	76,0	14,6	0,07	86,1	16,6	0,08	97,5	18,8	0,12	106,3	20,5	0,16
6K	21	33-27	–	–	–	–	–	–	–	–	–	30,8	5,0	0,01	38,5	6,2	0,02	43,9	7,1	0,02
		34-28	–	–	–	27,6	4,4	0,01	34,2	5,5	0,01	41,6	6,7	0,02	49,4	7,9	0,02	55,2	8,9	0,03
		35-29	29,9	4,8	0,01	37,5	6,0	0,01	43,5	7,0	0,02	51,3	8,2	0,02	59,7	9,6	0,03	66,2	10,6	0,05
		36-30	38,4	6,2	0,01	45,8	7,4	0,02	52,2	8,4	0,03	60,6	9,7	0,03	69,8	11,2	0,05	77,0	12,4	0,06
		37-31	45,1	7,2	0,02	52,9	8,5	0,02	59,7	9,6	0,03	68,7	11,0	0,04	78,8	12,6	0,06	86,6	13,9	0,08
		38-32	50,8	8,1	0,02	58,9	9,5	0,03	66,2	10,6	0,04	75,8	12,2	0,05	86,6	13,9	0,07	94,9	15,2	0,09
7K	21	36-29	–	–	–	31,7	4,4	0,01	39,5	5,4	0,01	48,2	6,6	0,02	57,2	7,9	0,02	64,0	8,8	0,03
		37-30	32,8	4,5	0,01	41,9	5,8	0,01	49,0	6,7	0,02	57,9	8,0	0,02	67,6	9,3	0,03	75,0	10,3	0,05
		38-31	41,0	5,6	0,01	49,5	6,8	0,02	56,8	7,8	0,02	66,2	9,1	0,03	76,6	10,5	0,04	84,6	11,6	0,06
5K	20	32-27	25,8	5,0	0,01	32,0	6,2	0,01	37,1	7,1	0,02	43,6	8,4	0,02	50,7	9,8	0,04	56,2	10,8	0,05
		33-28	33,2	6,4	0,01	39,4	7,6	0,02	44,8	8,6	0,03	51,8	10,0	0,03	59,7	11,5	0,05	65,8	12,7	0,07
		34-29	39,0	7,5	0,02	45,5	8,8	0,03	51,3	9,9	0,04	59,0	11,4	0,04	67,5	13,0	0,06	74,1	14,3	0,08
		35-30	45,3	8,7	0,02	52,4	10,1	0,03	58,7	11,3	0,05	67,0	12,9	0,05	76,4	14,7	0,08	83,7	16,1	0,10
		36-31	51,6	9,9	0,03	59,2	11,4	0,04	66,0	12,7	0,06	75,1	14,5	0,06	85,3	16,4	0,09	93,2	18,0	0,12
		37-32	57,7	11,1	0,03	65,9	12,7	0,05	73,3	14,1	0,07	83,1	16,0	0,08	94,1	18,1	0,11	102,7	19,8	0,15
		38-33	63,9	12,3	0,04	72,6	14,0	0,06	80,6	15,5	0,08	91,1	17,6	0,09	103,0	19,8	0,13	112,2	21,6	0,17
6K	20	33-27	–	–	–	–	–	–	31,9	5,1	0,01	39,4	6,3	0,01	47,0	7,6	0,02	52,8	8,5	0,03
		34-28	27,6	4,4	0,01	35,5	5,7	0,01	41,6	6,7	0,02	49,2	7,9	0,02	57,4	9,2	0,03	63,8	10,2	0,04
		35-29	35,8	5,7	0,01	43,1	6,9	0,02	49,4	7,9	0,02	57,5	9,2	0,03	66,5	10,7	0,04	73,4	11,8	0,06
		36-30	42,7	6,8	0,01	50,2	8,1	0,02	56,9	9,1	0,03	65,7	10,5	0,04	75,4	12,1	0,05	83,0	13,3	0,07
		37-31	49,2	7,9	0,02	57,2	9,2	0,03	64,3	10,3	0,04	73,8	11,8	0,04	84,3	13,5	0,06	92,5	14,9	0,09
		38-32	55,5	8,9	0,02	64,0	10,3	0,03	71,7	11,5	0,05	81,9	13,1	0,05	93,2	15,0	0,08	102,1	16,4	0,10
7K	20	36-29	–	–	–	38,8	5,3	0,01	45,9	6,3	0,02	54,7	7,5	0,02	64,2	8,8	0,03	71,4	9,8	0,04
		37-30	38,1	5,2	0,01	46,7	6,4	0,01	53,9	7,4	0,02	63,1	8,7	0,03	73,2	10,1	0,04	81,0	11,1	0,05
		38-31	45,4	6,2	0,01	54,0	7,4	0,02	61,5	8,5	0,03	71,4	9,8	0,03	82,2	11,3	0,05	90,6	12,5	0,06

Unit size			16/5			16/6			16/7			26/5			26/6			26/7		
Water temperature drop of	Wet-bulb temp. [°C]	Water-temp. [°C]	Operating cooling capacity [kW]	Operating water flow rate [m³/h]	Pressure drop (coil) [bar]	Operating cooling capacity [kW]	Operating water flow rate [m³/h]	Pressure drop (coil) [bar]	Operating cooling capacity [kW]	Operating water flow rate [m³/h]	Pressure drop (coil) [bar]	Operating cooling capacity [kW]	Operating water flow rate [m³/h]	Pressure drop (coil) [bar]	Operating cooling capacity [kW]	Operating water flow rate [m³/h]	Pressure drop (coil) [bar]	Operating cooling capacity [kW]	Operating water flow rate [m³/h]	Pressure drop (coil) [bar]
5K	21	32-27	77,7	15,0	0,09	86,7	16,7	0,12	93,7	18,0	0,16	134,7	25,9	0,34	147,2	28,4	0,44	154,2	29,7	0,53
		33-28	91,0	17,5	0,12	101,3	19,5	0,16	109,2	21,0	0,21	155,9	30,0	0,44	170,1	32,8	0,57	178,0	34,3	0,68
		34-29	104,4	20,1	0,15	115,9	22,3	0,21	124,8	24,0	0,27	177,0	34,1	0,56	193,0	37,2	0,72	201,9	38,9	0,86
		35-30	117,8	22,7	0,19	130,6	25,2	0,26	140,4	27,0	0,33	198,3	38,2	0,69	215,9	41,6	0,88	225,8	43,5	1,05
		36-31	131,2	25,3	0,23	145,2	28,0	0,31	155,9	30,0	0,40	219,5	42,3	0,82	238,9	46,0	1,06	249,7	48,1	1,27
		37-32	144,6	27,9	0,28	159,8	30,8	0,37	171,5	33,0	0,47	240,7	46,4	0,98	261,8	50,4	1,26	273,6	52,7	1,50
		38-33	158,1	30,4	0,32	174,5	33,6	0,44	187,2	36,1	0,55	261,9	50,5	1,14	284,8	54,9	1,46	297,5	57,3	1,74
6K	21	33-27	73,3	11,8	0,06	82,4	13,2	0,08	89,4	14,4	0,10	130,5	20,9	0,23	143,0	23,0	0,30	149,9	24,1	0,36
		34-28	88,5	14,2	0,08	98,9	15,9	0,11	106,9	17,2	0,14	154,2	24,8	0,31	168,7	27,1	0,41	176,7	28,4	0,48
		35-29	103,6	16,6	0,11	115,4	18,5	0,15	124,4	20,0	0,19	178,0	28,6	0,40	194,4	31,2	0,52	203,5	32,7	0,63
		36-30	118,6	19,0	0,14	131,8	21,2	0,19	141,9	22,8	0,24	201,9	32,4	0,51	220,2	35,3	0,66	230,3	37,0	0,79
		37-31	132,0	21,2	0,17	146,4	23,5	0,23	157,5	25,3	0,29	223,1	35,8	0,61	243,1	39,0	0,79	254,2	40,8	0,94
		38-32	143,7	23,1	0,20	159,2	25,6	0,27	171,2	27,5	0,34	241,6	38,8	0,70	263,1	42,2	0,91	275,1	44,2	1,08
7K	21	36-29	102,7	14,1	0,08	114,8	15,8	0,11	124,1	17,1	0,14	179,1	24,6	0,31	195,8	26,9	0,40	205,2	28,2	0,48
		37-30	117,8	16,2	0,10	131,2	18,1	0,14	141,6	19,5	0,18	202,9	27,9	0,39	221,6	30,5	0,50	232,0	31,9	0,60
		38-31	131,2	18,0	0,12	145,9	20,1	0,17	157,2	21,6	0,22	224,0	30,8	0,46	244,5	33,6	0,60	255,8	35,2	0,72
5K	20	32-27	87,7	16,9	0,11	97,7	18,8	0,15	105,3	20,3	0,19	150,6	29,0	0,42	164,4	31,7	0,54	172,1	33,1	0,64
		33-28	101,1	19,5	0,14	112,3	21,6	0,20	120,9	23,3	0,25	171,7	33,1	0,53	187,3	36,1	0,68	195,9	37,7	0,81
		34-29	112,8	21,7	0,17	125,1	24,1	0,24	134,5	25,9	0,30	190,3	36,7	0,64	207,3	39,9	0,82	216,8	41,8	0,98
		35-30	126,2	24,3	0,21	139,7	26,9	0,29	150,1	28,9	0,37	211,5	40,7	0,77	230,3	44,4	0,99	240,7	46,4	1,19
		36-31	139,6	26,9	0,26	154,3	29,7	0,35	165,7	31,9	0,44	232,7	44,8	0,92	253,2	48,8	1,18	264,6	51,0	1,41
		37-32	153,0	29,5	0,30	169,0	32,6	0,41	181,3	34,9	0,52	254,0	48,9	1,08	276,2	53,2	1,38	288,5	55,6	1,65
		38-33	166,5	32,1	0,36	183,7	35,4	0,48	196,9	37,9	0,61	275,2	53,0	1,24	299,1	57,6	1,60	312,4	60,2	1,91
6K	20	33-27	85,1	13,7	0,08	95,3	15,3	0,10	103,0	16,5	0,13	149,0	23,9	0,29	163,0	26,2	0,38	170,8	27,4	0,46
		34-28	100,2	16,1	0,10	111,7	17,9	0,14	120,6	19,4	0,18	172,7	27,7	0,38	188,7	30,3	0,50	197,6	31,7	0,59
		35-29	113,6	18,2	0,13	126,3	20,3	0,17	136,1	21,9	0,22	193,9	31,1	0,47	211,6	34,0	0,61	221,4	35,5	0,73
		36-30	127,0	20,4	0,16	140,9	22,6	0,21	151,7	24,3	0,27	215,1	34,5	0,57	234,5	37,6	0,74	245,3	39,4	0,88
		37-31	140,4	22,5	0,19	155,6	25,0	0,25	167,3	26,9	0,32	236,3	37,9	0,68	257,4	41,3	0,87	269,1	43,2	1,04
		38-32	153,8	24,7	0,22	170,2	27,3	0,30	182,8	29,4	0,38	257,5	41,3	0,79	280,3	45,0	1,02	293,0	47,0	1,22
7K	20	36-29	112,7	15,5	0,09	125,8	17,3	0,13	135,8	18,7	0,17	194,9	26,8	0,36	213,0	29,3	0,47	223,0	30,7	0,56
		37-30	126,1	17,4	0,12	140,4	19,3	0,16	151,3	20,8	0,20	216,1	29,7	0,43	235,9	32,5	0,56	246,9	34,0	0,67
		38-31	139,5	19,2	0,14	155,0	21,3	0,19	166,9	23,0	0,24	237,3	32,6	0,52	258,8	35,6	0,67	270,7	37,3	0,80

Only the single fan unit capacity data have been printed. For multi fan units multiply the capacity by the number of fans.

Table 2 Capacity tables for the most popular conditions

Cooling medium water with 35 weight % ethylene glycol

For operating conditions which you can´t find in table 2 the unit size must be calculated with correction factors k_1, k_2 and the nominal cooling capacity Q_N of table 1.

Unit size			33/5			33/6			33/7			45/5			45/6			45/7		
Water temperature drop of	Wet-bulb temp. [°C]	Water-temp. [°C]	Operating cooling capacity [kW]	Operating water flow rate [m³/h]	Pressure drop (coil) [bar]	Operating cooling capacity [kW]	Operating water flow rate [m³/h]	Pressure drop (coil) [bar]	Operating cooling capacity [kW]	Operating water flow rate [m³/h]	Pressure drop (coil) [bar]	Operating cooling capacity [kW]	Operating water flow rate [m³/h]	Pressure drop (coil) [bar]	Operating cooling capacity [kW]	Operating water flow rate [m³/h]	Pressure drop (coil) [bar]	Operating cooling capacity [kW]	Operating water flow rate [m³/h]	Pressure drop (coil) [bar]
5K	21	32-27	158,8	30,6	0,09	179,0	34,5	0,13	192,9	37,2	0,16	213,7	41,2	0,18	236,7	45,6	0,24	252,7	48,7	0,30
		33-28	186,0	35,8	0,12	208,9	40,3	0,17	224,7	43,3	0,22	248,4	47,9	0,23	274,5	52,9	0,31	292,7	56,4	0,40
		34-29	213,3	41,1	0,16	238,9	46,0	0,22	256,6	49,4	0,28	283,2	54,6	0,29	312,4	60,2	0,40	332,8	64,1	0,50
		35-30	240,6	46,3	0,19	269,0	51,8	0,27	288,5	55,6	0,34	318,0	61,3	0,36	350,3	67,5	0,49	372,9	71,8	0,62
		36-31	267,8	51,6	0,24	299,0	57,6	0,32	320,5	61,7	0,41	352,8	68,0	0,44	388,3	74,8	0,59	413,1	79,6	0,74
		37-32	295,1	56,9	0,28	329,1	63,4	0,39	352,5	67,9	0,49	387,6	74,7	0,52	426,3	82,1	0,70	453,3	87,3	0,88
		38-33	322,4	62,1	0,33	359,1	69,2	0,45	384,5	74,1	0,58	422,5	81,4	0,61	464,3	89,4	0,81	493,4	95,1	1,03
6K	21	33-27	150,2	24,1	0,06	170,5	27,4	0,08	184,4	29,6	0,11	205,3	33,0	0,12	228,2	36,6	0,16	244,2	39,2	0,21
		34-28	181,0	29,1	0,08	204,3	32,8	0,12	220,3	35,4	0,15	244,3	39,2	0,16	270,8	43,5	0,22	289,2	46,4	0,28
		35-29	211,7	34,0	0,11	238,0	38,2	0,15	256,1	41,1	0,20	283,4	45,5	0,21	313,4	50,3	0,29	334,3	53,7	0,36
		36-30	242,3	38,9	0,14	271,7	43,6	0,20	292,0	46,9	0,25	322,5	51,8	0,27	356,0	57,1	0,36	379,3	60,9	0,46
		37-31	269,6	43,3	0,17	301,7	48,4	0,24	323,9	52,0	0,30	357,2	57,3	0,32	393,9	63,2	0,43	419,4	67,3	0,55
		38-32	293,4	47,1	0,20	328,0	52,7	0,27	351,8	56,5	0,35	387,6	62,2	0,37	427,1	68,6	0,50	454,5	73,0	0,64
7K	21	36-29	210,0	28,9	0,08	237,0	32,6	0,11	255,7	35,2	0,15	283,6	39,0	0,16	314,3	43,3	0,22	335,8	46,2	0,28
		37-30	240,7	33,1	0,11	270,8	37,3	0,15	291,5	40,1	0,19	322,7	44,4	0,20	356,9	49,1	0,27	380,8	52,4	0,35
		38-31	268,0	36,9	0,13	300,8	41,4	0,18	323,4	44,5	0,23	357,4	49,2	0,24	394,8	54,3	0,33	420,8	57,9	0,42
5K	20	32-27	179,2	34,5	0,11	201,5	38,8	0,16	216,8	41,8	0,20	239,8	46,2	0,22	265,1	51,1	0,29	282,7	54,5	0,37
		33-28	206,5	39,8	0,15	231,4	44,6	0,20	248,7	47,9	0,26	274,5	52,9	0,28	302,9	58,4	0,37	322,8	62,2	0,48
		34-29	230,3	44,4	0,18	257,7	49,6	0,25	276,6	53,3	0,32	304,9	58,7	0,34	336,1	64,8	0,45	357,9	68,9	0,57
		35-30	257,6	49,6	0,22	287,7	55,4	0,30	308,5	59,4	0,39	339,7	65,4	0,41	374,1	72,1	0,55	398,0	76,7	0,70
		36-31	284,9	54,9	0,26	317,8	61,2	0,36	340,5	65,6	0,46	374,5	72,2	0,49	412,0	79,4	0,65	438,2	84,4	0,83
		37-32	312,2	60,1	0,31	347,8	67,0	0,43	372,5	71,8	0,54	409,4	78,9	0,57	450,0	86,7	0,77	478,4	92,2	0,97
		38-33	339,5	65,4	0,36	377,9	72,8	0,50	404,5	77,9	0,63	444,2	85,6	0,67	488,0	94,0	0,89	518,6	99,9	1,13
6K	20	33-27	174,2	28,0	0,08	196,8	31,6	0,11	212,3	34,1	0,14	235,7	37,8	0,15	261,3	42,0	0,21	279,2	44,8	0,26
		34-28	204,9	32,9	0,10	230,5	37,0	0,14	248,2	39,8	0,19	274,7	44,1	0,20	303,9	48,8	0,27	324,2	52,1	0,34
		35-29	232,1	37,3	0,13	260,5	41,8	0,18	280,1	45,0	0,23	309,4	49,7	0,25	341,8	54,9	0,33	364,3	58,5	0,43
		36-30	259,4	41,6	0,16	290,5	46,6	0,22	311,9	50,1	0,28	344,2	55,3	0,30	379,6	60,9	0,40	404,4	64,9	0,51
		37-31	286,6	46,0	0,19	320,5	51,5	0,26	343,9	55,2	0,34	378,9	60,8	0,36	417,6	67,0	0,48	444,5	71,4	0,61
		38-32	313,9	50,4	0,23	350,5	56,3	0,31	375,8	60,3	0,40	413,7	66,4	0,42	455,5	73,1	0,56	484,6	77,8	0,71
7K	20	36-29	230,5	31,7	0,10	259,5	35,7	0,14	279,6	38,5	0,18	309,6	42,6	0,19	342,7	47,2	0,25	365,8	50,3	0,32
		37-30	257,7	35,5	0,12	289,5	39,8	0,17	311,5	42,9	0,21	344,4	47,4	0,23	380,6	52,4	0,31	405,8	55,8	0,39
		38-31	285,0	39,2	0,14	319,5	44,0	0,20	343,3	47,2	0,25	379,1	52,2	0,27	418,4	57,6	0,36	445,9	61,4	0,46

Unit size			52/5			52/6			52/7			77/5			77/6			77/7		
Water temperature drop of	Wet-bulb temp. [°C]	Water-temp. [°C]	Operating cooling capacity [kW]	Operating water flow rate [m³/h]	Pressure drop (coil) [bar]	Operating cooling capacity [kW]	Operating water flow rate [m³/h]	Pressure drop (coil) [bar]	Operating cooling capacity [kW]	Operating water flow rate [m³/h]	Pressure drop (coil) [bar]	Operating cooling capacity [kW]	Operating water flow rate [m³/h]	Pressure drop (coil) [bar]	Operating cooling capacity [kW]	Operating water flow rate [m³/h]	Pressure drop (coil) [bar]	Operating cooling capacity [kW]	Operating water flow rate [m³/h]	Pressure drop (coil) [bar]
5K	21	32-27	260,3	50,2	0,36	286,8	55,3	0,38	302,1	58,2	0,37	344,0	66,3	0,53	375,4	72,3	0,71	396,3	76,4	0,89
		33-28	301,4	58,1	0,48	331,5	63,9	0,50	348,9	67,2	0,48	396,5	76,4	0,69	432,2	83,3	0,92	456,0	87,8	1,14
		34-29	342,6	66,0	0,60	376,3	72,5	0,63	395,8	76,2	0,61	449,1	86,5	0,87	489,1	94,2	1,15	515,8	99,4	1,43
		35-30	383,7	73,9	0,74	421,1	81,1	0,77	442,7	85,3	0,75	501,7	96,7	1,06	546,0	105,2	1,40	575,5	110,9	1,75
		36-31	424,9	81,9	0,89	465,9	89,8	0,93	489,6	94,3	0,90	554,4	106,8	1,27	602,9	116,2	1,68	635,3	122,4	2,09
		37-32	466,2	89,8	1,05	510,7	98,4	1,10	536,6	103,4	1,06	607,0	116,9	1,50	659,9	127,1	1,98	–	–	–
		38-33	507,4	97,7	1,23	555,6	107,0	1,28	583,5	112,4	1,23	659,7	127,1	1,75	–	–	–	–	–	–
6K	21	33-27	251,9	40,4	0,25	278,3	44,7	0,26	293,6	47,1	0,25	335,4	53,8	0,37	366,8	58,9	0,49	387,7	62,2	0,61
		34-28	298,1	47,8	0,33	328,5	52,7	0,35	346,2	55,6	0,34	394,4	63,3	0,49	430,6	69,1	0,65	454,7	73,0	0,82
		35-29	344,3	55,3	0,43	378,8	60,8	0,46	398,8	64,0	0,44	453,5	72,8	0,63	494,5	79,4	0,84	521,9	83,8	1,05
		36-30	390,5	62,7	0,55	429,1	68,9	0,57	451,5	72,5	0,55	512,6	82,3	0,79	558,5	89,7	1,05	589,0	94,6	1,31
		37-31	431,7	69,3	0,66	473,9	76,1	0,69	498,4	80,0	0,66	565,2	90,7	0,95	615,4	98,8	1,25	648,8	104,2	1,56
		38-32	467,7	75,1	0,76	513,1	82,4	0,79	539,4	86,6	0,77	611,3	98,1	1,09	665,2	106,8	1,44	701,1	112,6	1,80
7K	21	36-29	346,0	47,6	0,33	381,4	52,5	0,35	402,0	55,3	0,34	458,0	63,0	0,49	500,0	68,8	0,65	528,0	72,7	0,81
		37-30	392,2	54,0	0,42	431,7	59,4	0,44	454,6	62,6	0,42	517,0	71,1	0,61	563,9	77,6	0,81	595,1	81,9	1,01
		38-31	433,3	59,6	0,50	476,4	65,6	0,52	501,4	69,0	0,51	569,6	78,4	0,72	620,7	85,4	0,96	654,9	90,1	1,20
5K	20	32-27	291,2	56,1	0,45	320,3	61,7	0,47	337,2	65,0	0,45	383,4	73,9	0,65	418,0	80,5	0,86	441,1	85,0	1,08
		33-28	332,3	64,0	0,57	365,1	70,3	0,59	384,1	74,0	0,58	435,9	84,0	0,82	474,9	91,5	1,09	500,8	96,5	1,36
		34-29	368,3	70,9	0,69	404,3	77,9	0,72	425,1	81,9	0,69	482,0	92,8	0,99	524,7	101,1	1,30	553,1	106,6	1,63
		35-30	409,5	78,9	0,83	449,1	86,5	0,87	472,0	90,9	0,84	534,6	103,0	1,19	581,6	112,0	1,57	612,9	118,1	1,96
		36-31	450,7	86,8	0,99	493,9	95,2	1,03	519,0	100,0	1,00	587,3	113,1	1,41	638,5	123,0	1,87	672,7	129,6	2,32
		37-32	491,9	94,8	1,16	538,8	103,8	1,21	565,9	109,0	1,17	640,0	123,3	1,65	–	–	–	–	–	–
		38-33	533,2	102,7	1,34	583,7	112,4	1,40	612,9	118,1	1,35	–	–	–	–	–	–	–	–	–
6K	20	33-27	287,8	46,2	0,31	317,4	51,0	0,33	334,5	53,7	0,32	381,3	61,2	0,46	416,4	66,8	0,61	439,8	70,6	0,77
		34-28	334,0	53,6	0,41	367,6	59,0	0,43	387,1	62,1	0,42	440,3	70,7	0,60	480,3	77,1	0,80	506,9	81,4	1,00
		35-29	375,1	60,2	0,51	412,4	66,2	0,53	434,0	69,7	0,52	492,9	79,1	0,74	537,1	86,2	0,98	566,6	91,0	1,22
		36-30	416,2	66,8	0,61	457,1	73,4	0,64	480,8	77,2	0,62	545,5	87,6	0,89	594,0	95,4	1,17	626,4	100,6	1,46
		37-31	457,4	73,4	0,73	501,9	80,6	0,76	527,7	84,7	0,74	598,1	96,0	1,05	650,9	104,5	1,39	686,2	110,2	1,73
		38-32	498,6	80,0	0,85	546,7	87,8	0,89	574,6	92,2	0,86	650,8	104,5	1,22	707,9	113,6	1,61	745,9	119,8	2,01
7K	20	36-29	376,8	51,8	0,39	414,9	57,1	0,41	437,0	60,1	0,39	497,3	68,4	0,57	542,6	74,7	0,75	572,8	78,8	0,94
		37-30	417,9	57,5	0,47	459,7	63,2	0,49	483,8	66,6	0,48	549,9	75,7	0,68	599,4	82,5	0,90	632,5	87,0	1,13
		38-31	459,0	63,2	0,55	504,4	69,4	0,58	530,7	73,0	0,56	602,4	82,9	0,80	656,3	90,3	1,06	692,2	95,2	1,33

Only the single fan unit capacity data have been printed. For multi fan units multiply the capacity by the number of fans.

Selection Curves 1

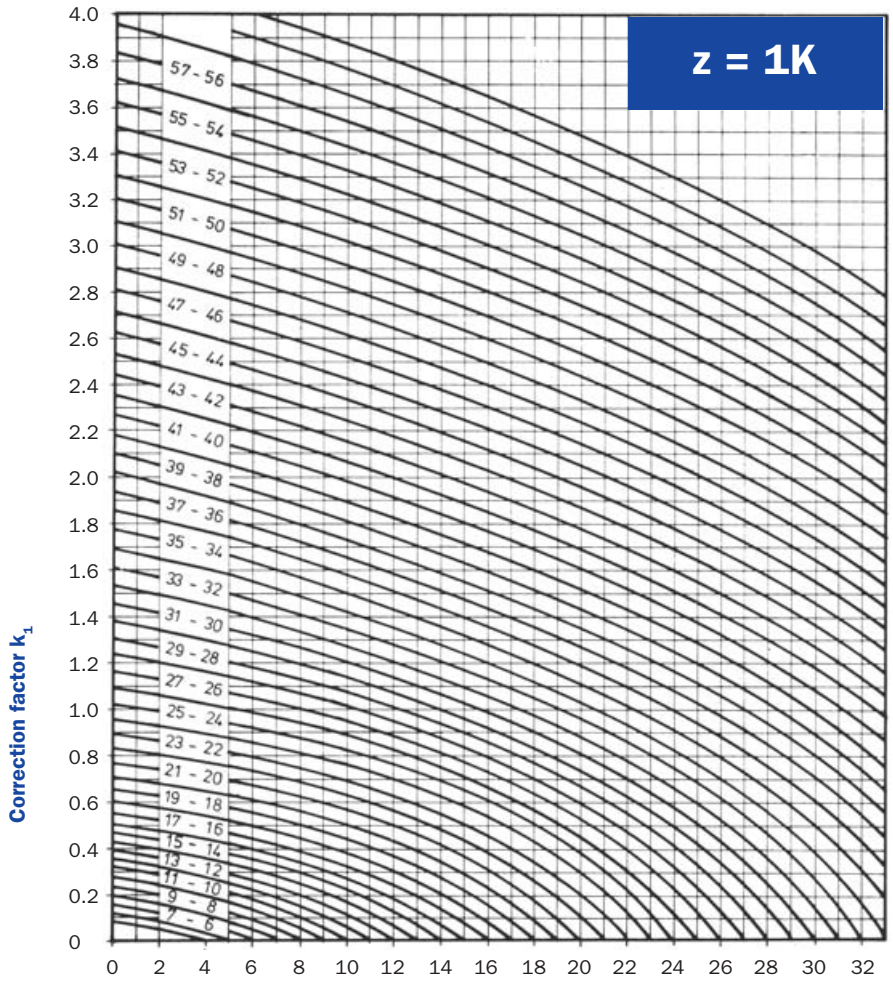

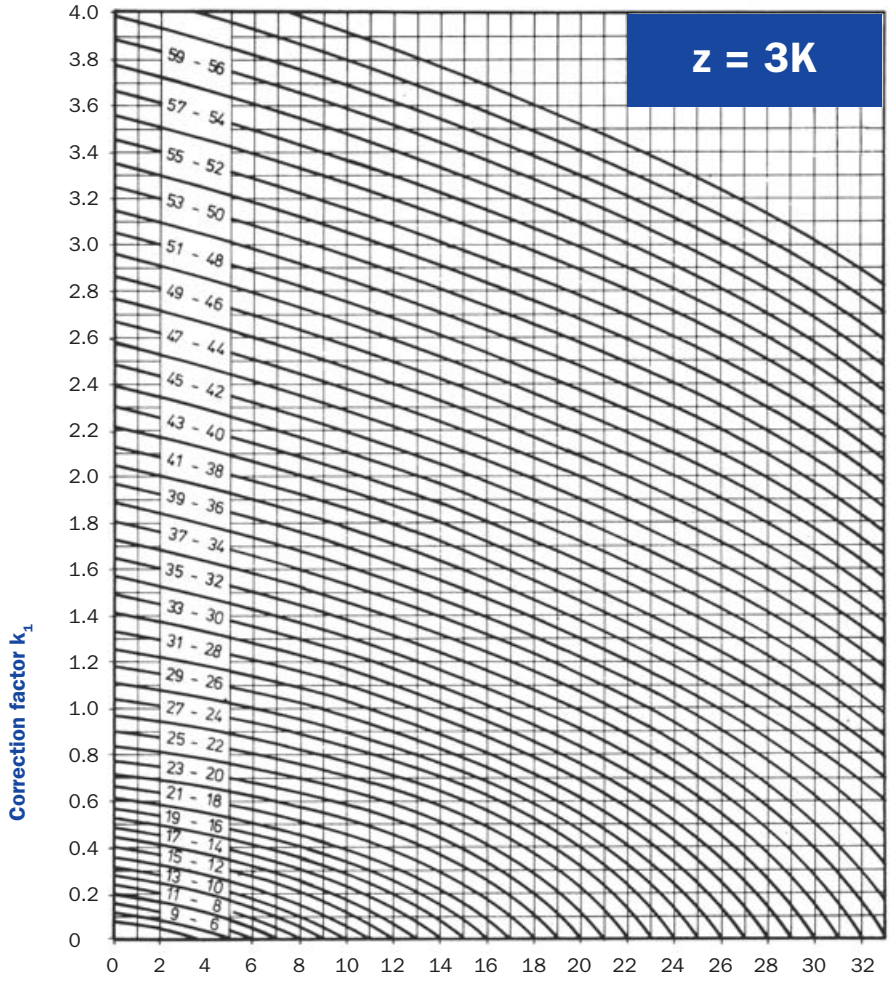

Selection Curves 1

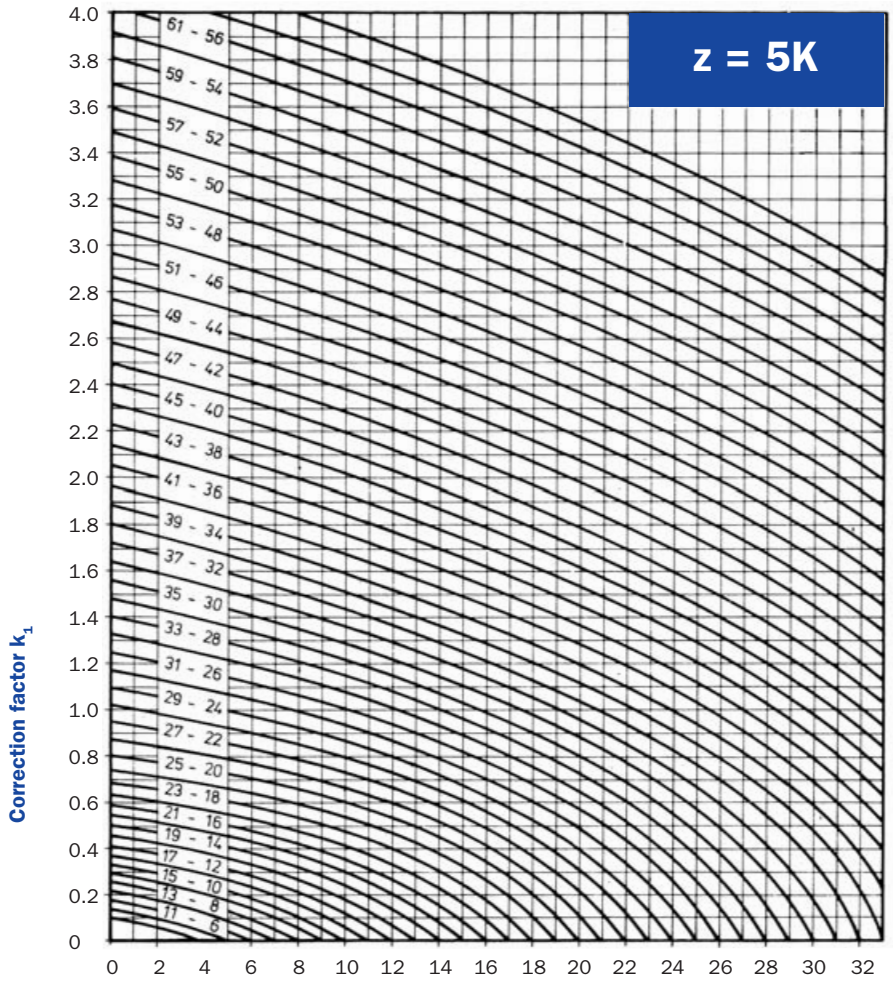

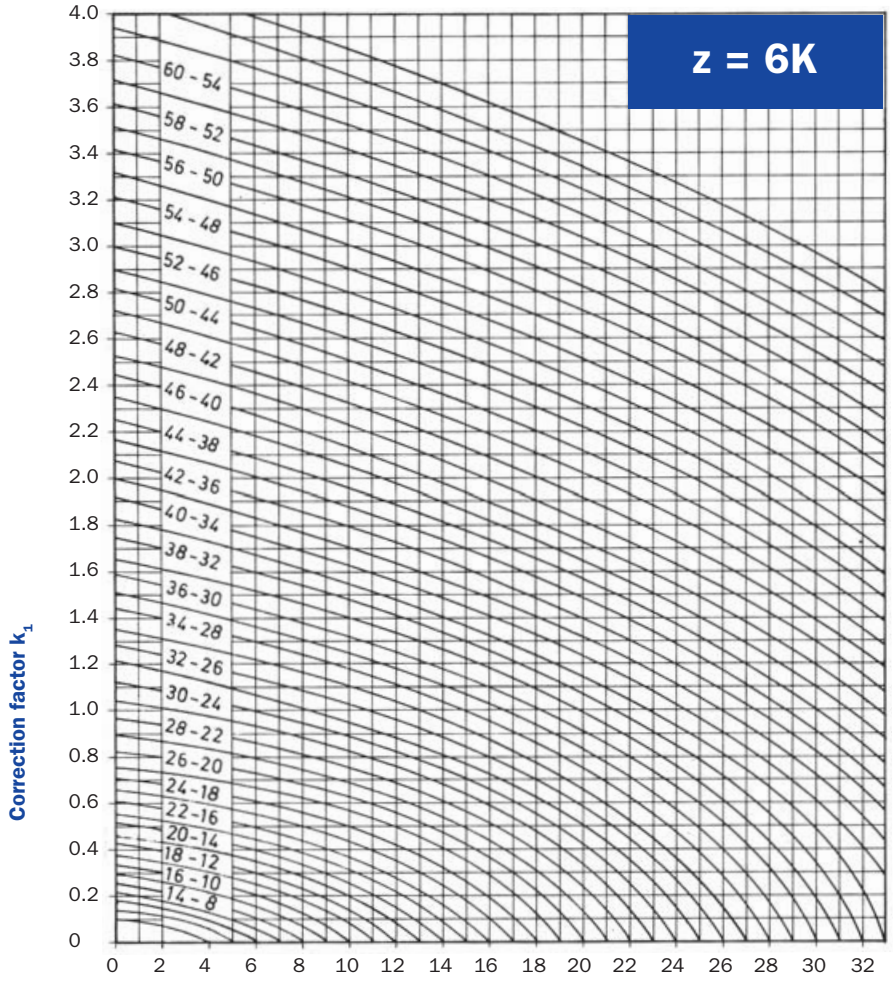

Selection Curves 1

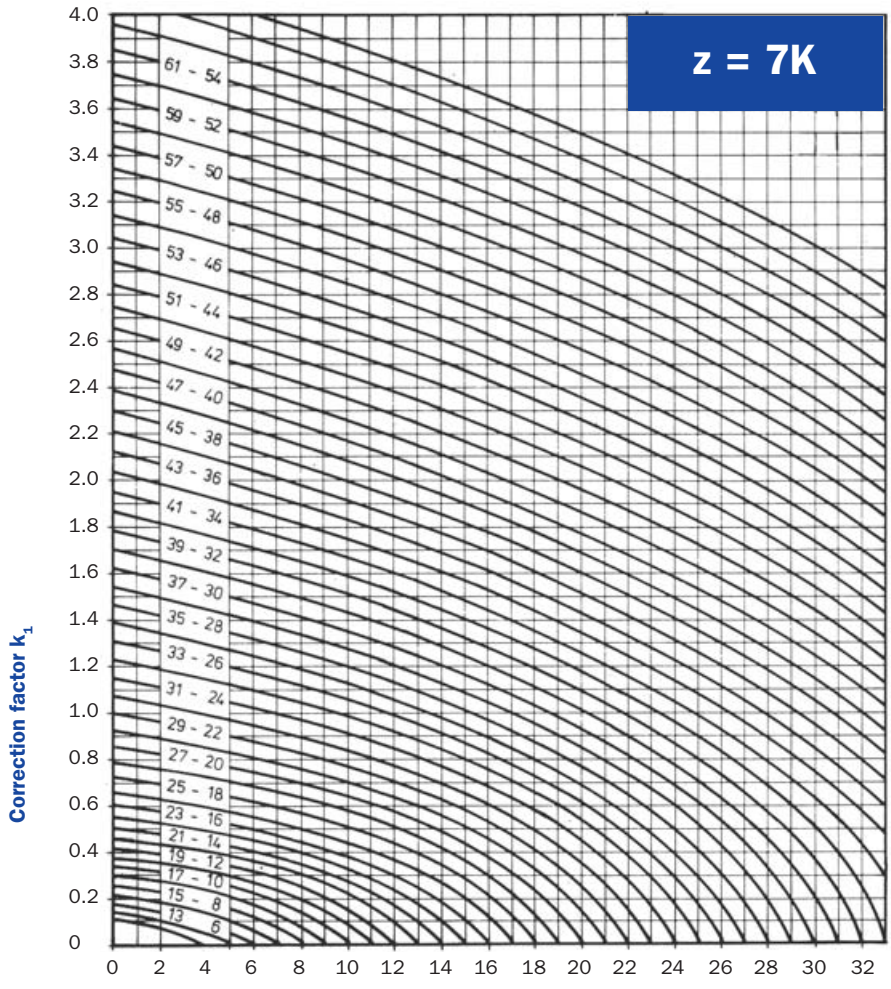

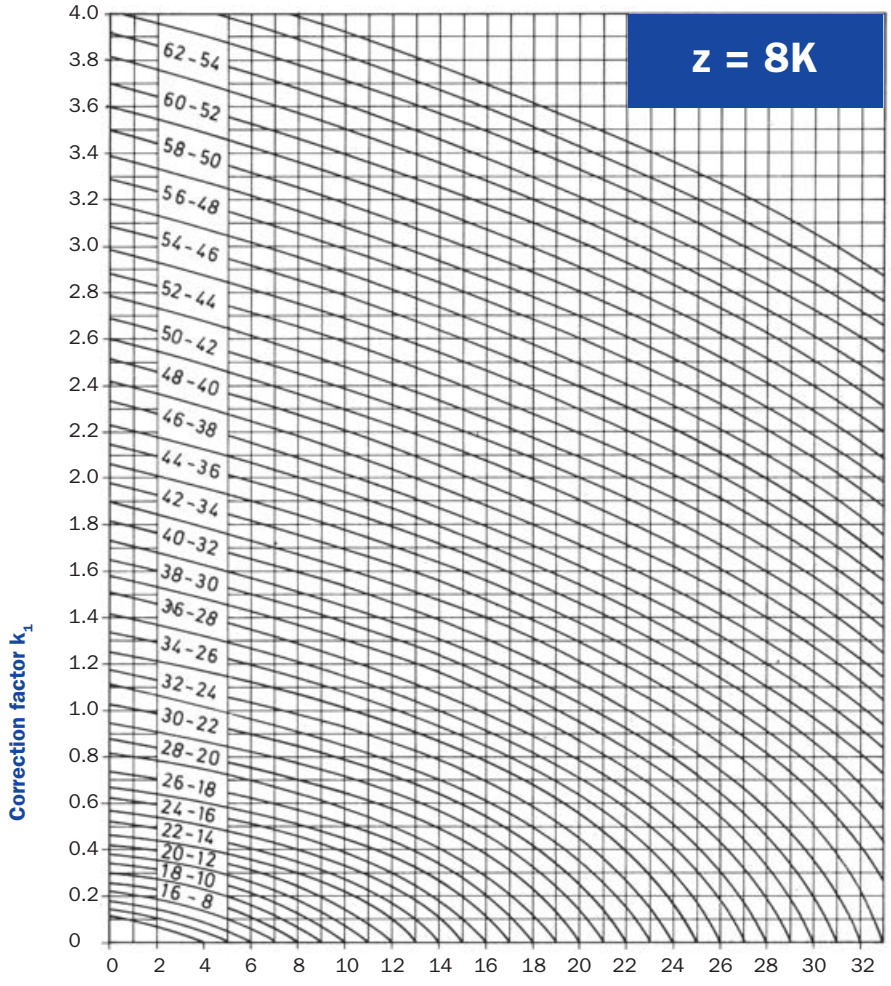

Selection Curves 1

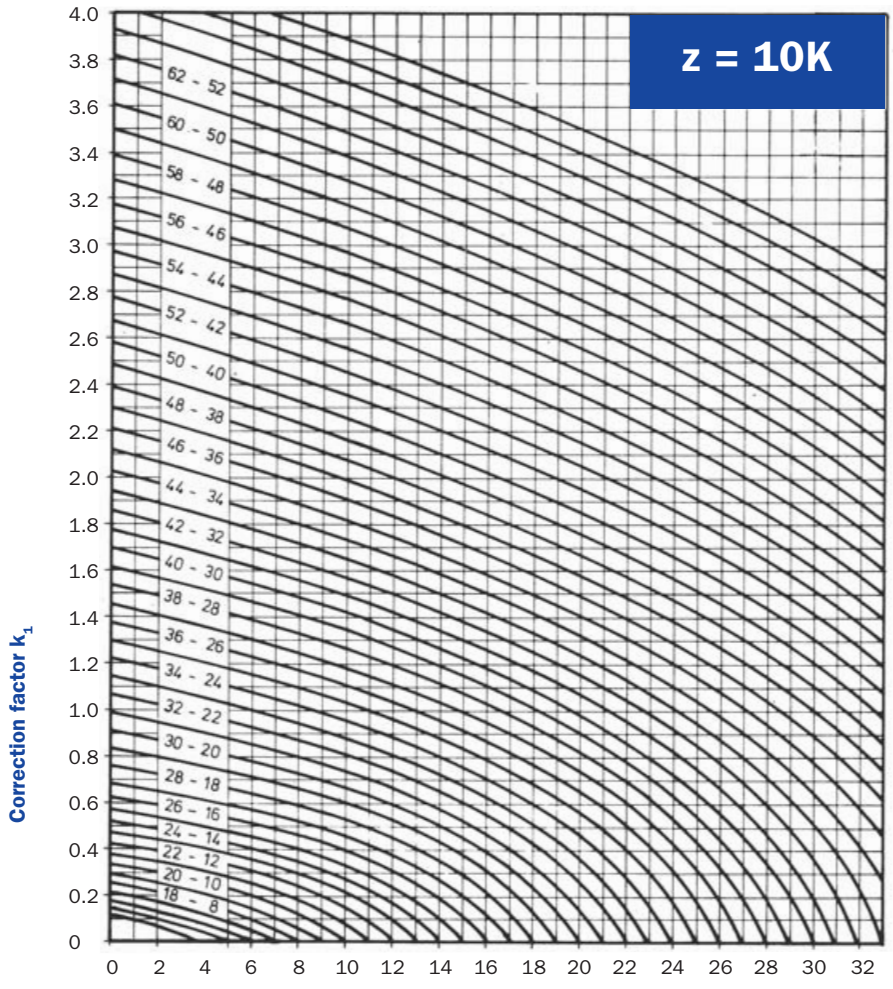

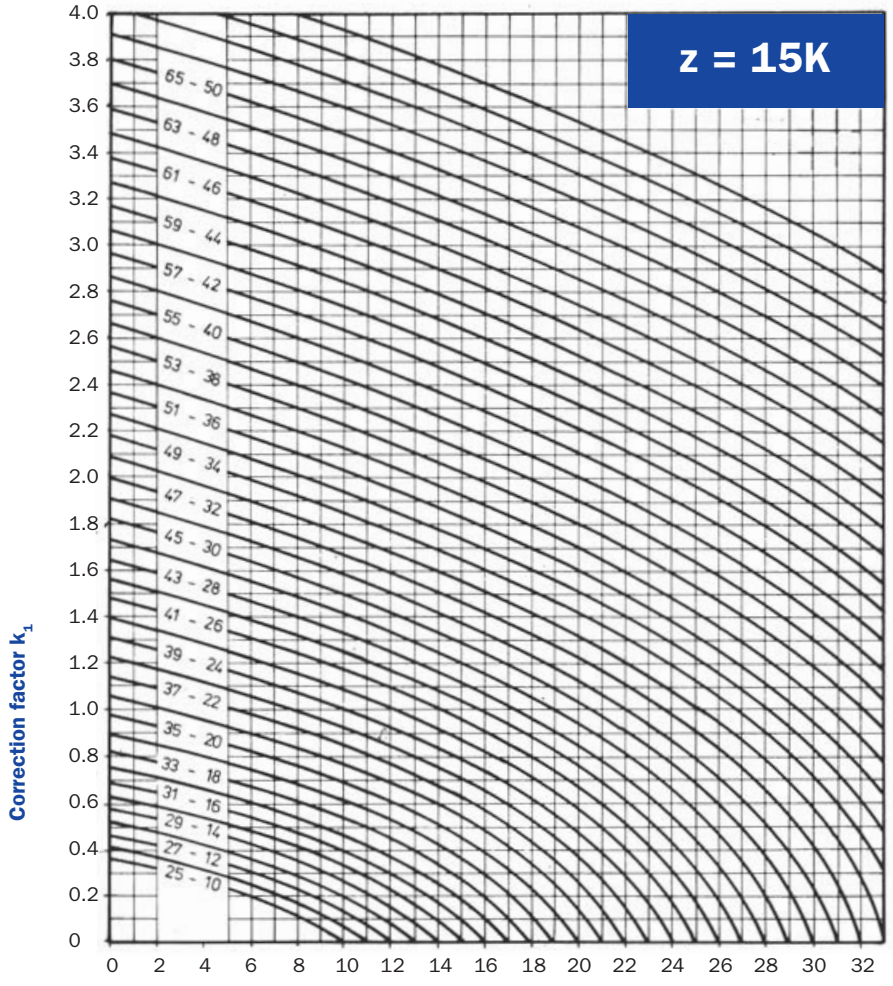

Selection Curves 1

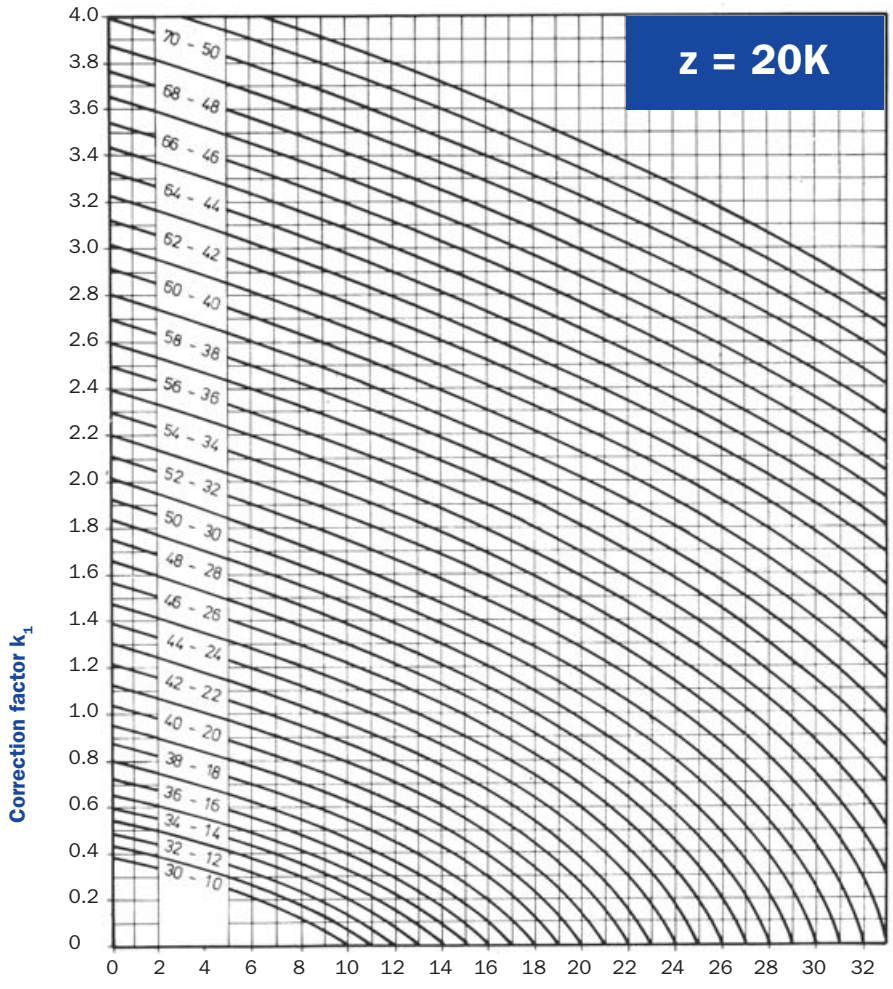

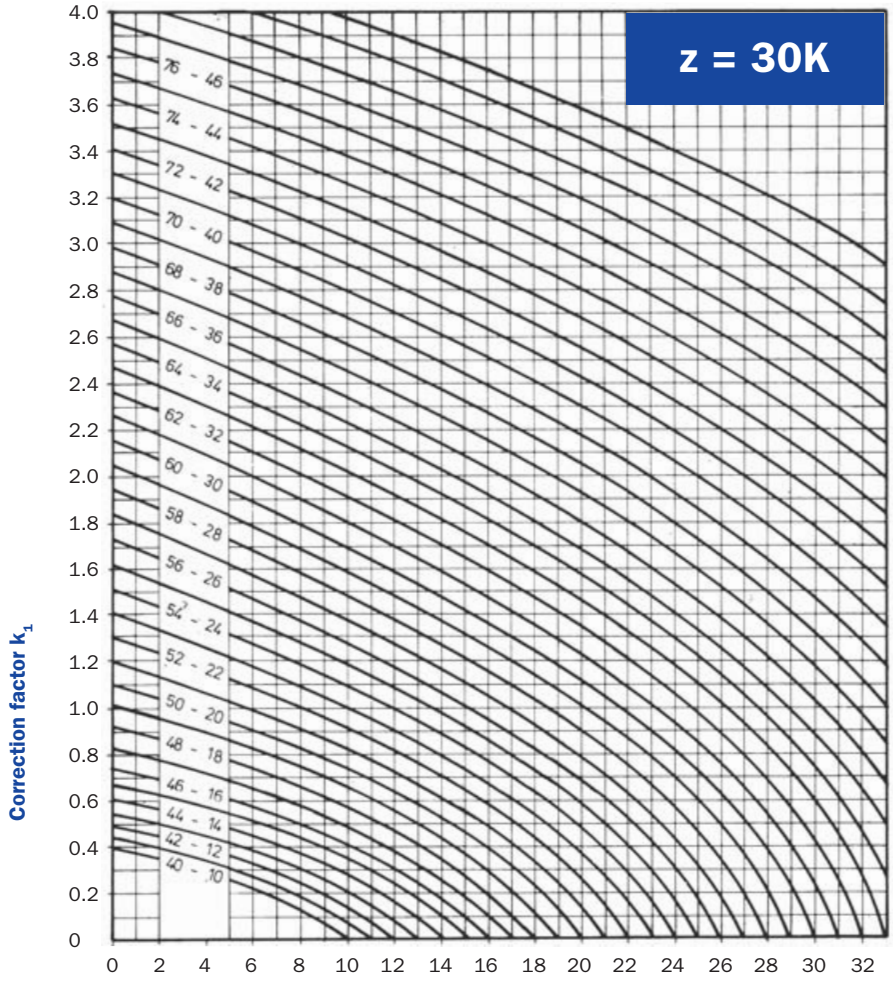

The temperature of the water, as well as the wet-bulb temperature, are the deciding factors for determining the correction factor k_1. The higher the water temperature and the lower the wet-bulb temperature, the larger is k_1. The velocity of the water in the coil system is to be considered with the correction factor k_2 which, in turn, can be determined from the selection curve 2.

Selection curve 2

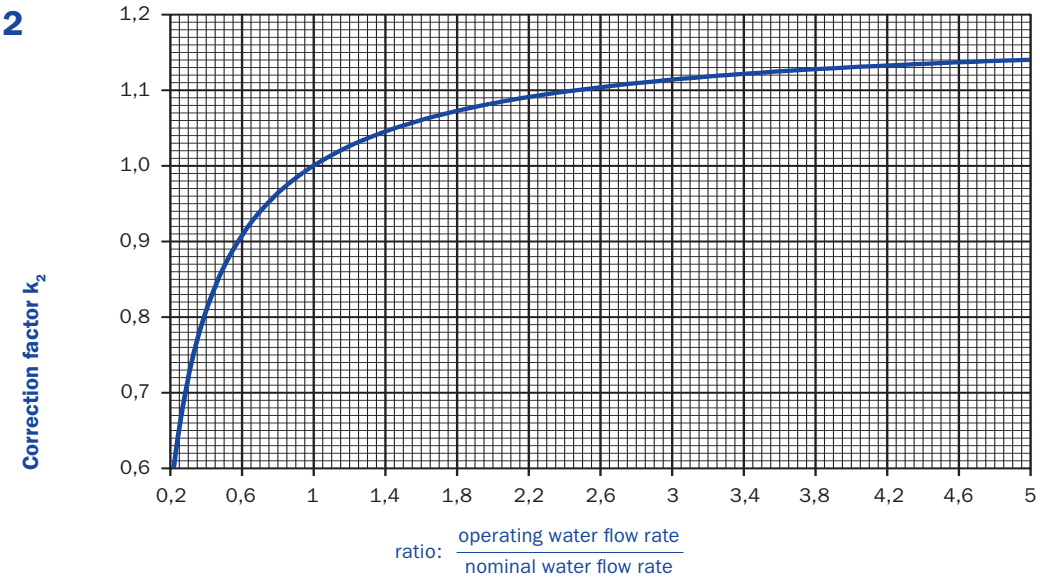

Selection procedure

Steps of calculation

1 **Determination of operating cooling capacity Q_B**
2 Correction factor k_1 from selection curve 1. Interpolation if necessary.
3 Determine nominal cooling capacity Q_N. Correction factor k_2 is set at 1,0.

$$Q_N = \frac{Q_B}{k_1 \cdot k_2} = \frac{Q_B}{k_1}$$

4 Choose a unit with an equal or higher nominal cooling capacity.
5 Divide the operating water flow rate by the nominal water flow rate of the unit.
6 Find the correct correction factor k_2 on the selection curve 2. Please note the end number of the unit.
7 Calculate the required nominal cooling capacity $Q_{N\ req.}$ with both correction factors k_1 and k_2.
8 The celection is correct, if this calculated nominal capacity is equal or lower than that of the chosen unit. If it is higher the calculation should be repeated with the next size unit.
9 The operating water flow rate must lie within the permissible water flow rates indicated in table 1.
10 Determine pressure drop for coil from selection curve 3.

Selection examples

Example 1

Given:

Operating water flow rate	G_W	= 55000 kg/h
Water inlet temperature	t_{WI}	= + 35 °C
Water outlet temperature	t_{WO}	= + 27 °C
Wet-bulb temperature	t_{WB}	= + 21 °C

You can't find the operating conditions in table 2.

Result:

1 Q_B = 55000 (35-27) = 440000 kcal/h = 512 kW
2 k_1 = 0,71 (Selection curve 8 K cooling range)
3 $Q_N = \frac{512\ kW}{0{,}71} = 721\ kW$
4 Unit selected: 2/45/5 with Q_N = 736 kW
5 $\frac{\text{operating water flow rate}}{\text{nominal water flow rate}} = \frac{55000\ kg/h}{56000\ kg/h} = 0{,}982$
6 k_2 = 0,99 from selection curve 2
7 $Q_{N\ req.} = \frac{512\ kW}{0{,}71 \cdot 0{,}99} = 728\ kW$
8 The choise stays with unit 2/45/6 with $Q_{N\ is}$ = 736 kW
9 The permissible water flow rate lies between 16800 and 260000 kg/h. 55000 kg/h are between these figures.
10 The pressure drop for the coil is 0,08 bar.

Example 2

Given:

Operating water flow rate	G_W	= 30000 kg/h
Water inlet temperature	t_{WI}	= + 50 °C
Water outlet temperature	t_{WO}	= + 30 °C
Wet-bulb temperature	t_{WB}	= + 21 °C

You can't find the operating conditions in table 2.

Result:

1 Q_B = 30000 (50-30) = 600000 kcal/h = 697,7 kW
2 k_1 = 1,01 (Selection curve 20 K cooling range)
3 $Q_N = \frac{697{,}7\ kW}{1{,}01} = 690{,}8\ kW$
4 Unit selected: 2/45/5 mit Q_N = 736 kW
5 $\frac{\text{operating water flow rate}}{\text{nominal water flow rate}} = \frac{30000\ kg/h}{56000\ kg/h} = 0{,}536$
6 k_2 = 0,88 from selection curve 2
7 $Q_{N\ req.} = \frac{697{,}7\ kW}{1{,}01 \cdot 0{,}88} = 785\ kW$
8 **The selected unit is to small.**
Select new unit once start with item 4.
4* New unit 2/45/6 with Q_N = 802 kW
5* $\frac{\text{operating water flow rate}}{\text{nominal water flow rate}} = \frac{30000\ kg/h}{56000\ kg/h} = 0{,}536$
6* k_2 = 0,88 from selection curve 2
7* $Q_{N\ req.} = \frac{697{,}7\ kW}{1{,}01 \cdot 0{,}88} = 785\ kW$
8* The chois stays with unit 2/45/6 with Q_N = 802 kW
9 The permissible water flow rate lies between 16800 and 260000 kg/h. 30000 kg/h are between these figures.
10 The pressure drop for the coil is 0,03 bar.

Operation of an Evaporative Cooler

with ethylene glycol (table 3a)
with propylene glycol (table 3b)

If an Evaporative Cooler must be shut off at temperatures lower than 0 °C, and if the coil system cannot be emptied, it is advisable to use a mixture of water and ethylene glycol for the circuit in order to prevent freezing in the coil.
A good mixture for middle european conditions consists of 40 weight % or 32,2 Vol. % ethylene glycol with water. If exact proportions are observed, however, a mixture of 30 weight % or 28 Vol. % may be sufficient.

Table 3a Ethylene glycol* For example Antifrogen N (registered trade)

Ethylene glycol proportion	Mixture begins to freeze at	Density at +30°C in kg/m³	Spec. heat at +30 °C in kJ/kg K	Multiplier for the pressure drop in the coil compared to the water flow rate	Multiplier for the nominal water flow rate	Multiplier to calculate the ethylene glycol flow rate in kg/h
40 weight %	- 26,7 °C	1050	3,52	1,32	1,76	1,135
35 weight %	- 21,8 °C	1045	3,58	1,275	1,45	1,12
30 weight %	- 17 °C	1040	3,64	1,23	1,30	1,105
25 weight %	- 13 °C	1034	3,73	1,19	1,20	1,08

The unit is selected in the same manner as using water. There is no difference up to step 4. In step 5, as indicated in table 3 and shown in the example, consideration must be given to the multiplier for the nominal water flow rate. Selection curve 2 must not, however, under any circumstances be extended to the left (laminar flow) if the ratio falls under 0,3. A larger flow rate at a lower cooling range is to be strived for in this case.

Ethylene glycol is successfully proved as brine for closed circuit by thousands of evaporative cooler inspite of its toxin characteristic feature.
Is there any doubt to use ethylene glycol you can use propylene glycol. But its heat transmission is unfavourable than by ethylene glycol.

Table 3b Propylene glycol* For example Antifrogen L (registered trade mark)

Propylene glycol proportion	Mixture begins to freeze at	Density at +30°C in kg/m³	Spec. heat at +30 °C in kJ/kg K	Multiplier for the pressure drop in the coil compared to the water flow rate	Multiplier for the nominal water flow rate	Multiplier to calculate the propylene glycol flow rate in kg/h
45 weight %	- 25 °C	1033	3,70	1,42	2,56	1,090
40 weight %	- 21 °C	1030	3,80	1,36	2,25	1,065
35 weight %	- 17 °C	1027	3,88	1,31	1,92	1,040
30 weight %	- 14 °C	1023	3,94	1,27	1,57	1,025

*** Remark**
Pure mixtures without inhibitors should not be used because of its corrosive charateristic features. The chemical industry offers only brines of glycol base. For example Antifrogen N with registered trade mark for ethylene glycol and antifrogen L with registered trade mark for propylene glycol.

Selection example

Given:

Operating water flow rate	G_W	= 19 000 kg/h
Water inlet temperature	t_{WI}	= + 36 °C
Water outlet temperatutre	t_{WO}	= + 30 °C
Wet-bulb temperature	t_{WB}	= + 20 °C

In this example the unit should work with a 35 weight % ethylene glycol mixture, to prevent freezing in the coil. You can´t find the operating conditions in table 2.

Result:

1 Q_B= 19 000(36-30) = 114 000 kcal/h= 132,6 kW

2 k_1 = 0,91 (Selection chart for 6 K cooling range)

3 $Q_{N\ req.} = \frac{132{,}6\ kW}{0{,}91} = 145{,}7\ kW$

4 Unit selected 16/6 with Q_N = 145,7 kW

5 $\frac{\text{operating water flow rate}}{\text{nominal water flow rate} \cdot \text{multiplier with the nominal water flow rate}}$

$= \frac{19\,000\ kg/h}{14\,000\ kg/h \cdot 1{,}45} = 0{,}93$

6 k_2 = 0,98 from selection curve 2

7 $Q_{N\ req.} = \frac{132{,}6\ kW}{0{,}91 \cdot 0{,}98} = 149\ kW$

8 The choise stars with unit 16/6 with Q_N = 155 kW

9 The permissible water flow rate lies between 4200 and 65000 kg/h. 19000 kg/h are between these figures.

10 The pressure drop in the coil system for water is 0,16 bar, for the mixture with the multiplier 1,275 from table 3, 0,16 x 1,275 = 0,2 bar.

When selecting the pump the operating ethylene glycol water flow rate should be known. The multiplier is also given in table 3.
Example: 19 000 kg/h water 1,12 = 21 000 l/h 35 weight % ethylene glycol/water mixture.

For enquiries please note: The following data use essential for the selection of an evaporative cooler:

1 Water inlet temperature e.g. + 32 °C.
2 Requested water outlet temperature e.g. + 25 °C.
3 Water flow rate e.g. 50 m³/h
4 Ambient wet-bulb temperature e.g. + 20 °C.
5 Plan of the available space for the installation.
6 Additional static pressure of the fan.
7 Air cooled operation of the evaporative cooler (without water spraying) wanted?

Pressure drop in the coil system

The pressure drop in the coil must be known to select the pumpe for the water circuit. Consult curve 3 for this purpose.

Example 1 (water)

There are 210000 kg/h water to be cooled in a unit 3/77/5.
The unit has three fans (indicated by the first number).
Read: 0,57 bar.

Example 2 (35 weight % Ethylene glycol)

There are 20 000 kg/h water to be cooled in a unit 16/5.
The unit has one fan.
Read for water: 0,14 bar.
Multiplier from table 3 for the pressure drop of ethylene glycol vs water: 1,275.
For 35 weight % ethylene glycol: 0,14 x 1,275 = 0,18 bar.
Circulating ethylene glycol (at same cooling range): 20 000 x 1,12 = 22 400 l/h.
Multiplier 1,12 from table 3a/water mixture.

Selection curve 3

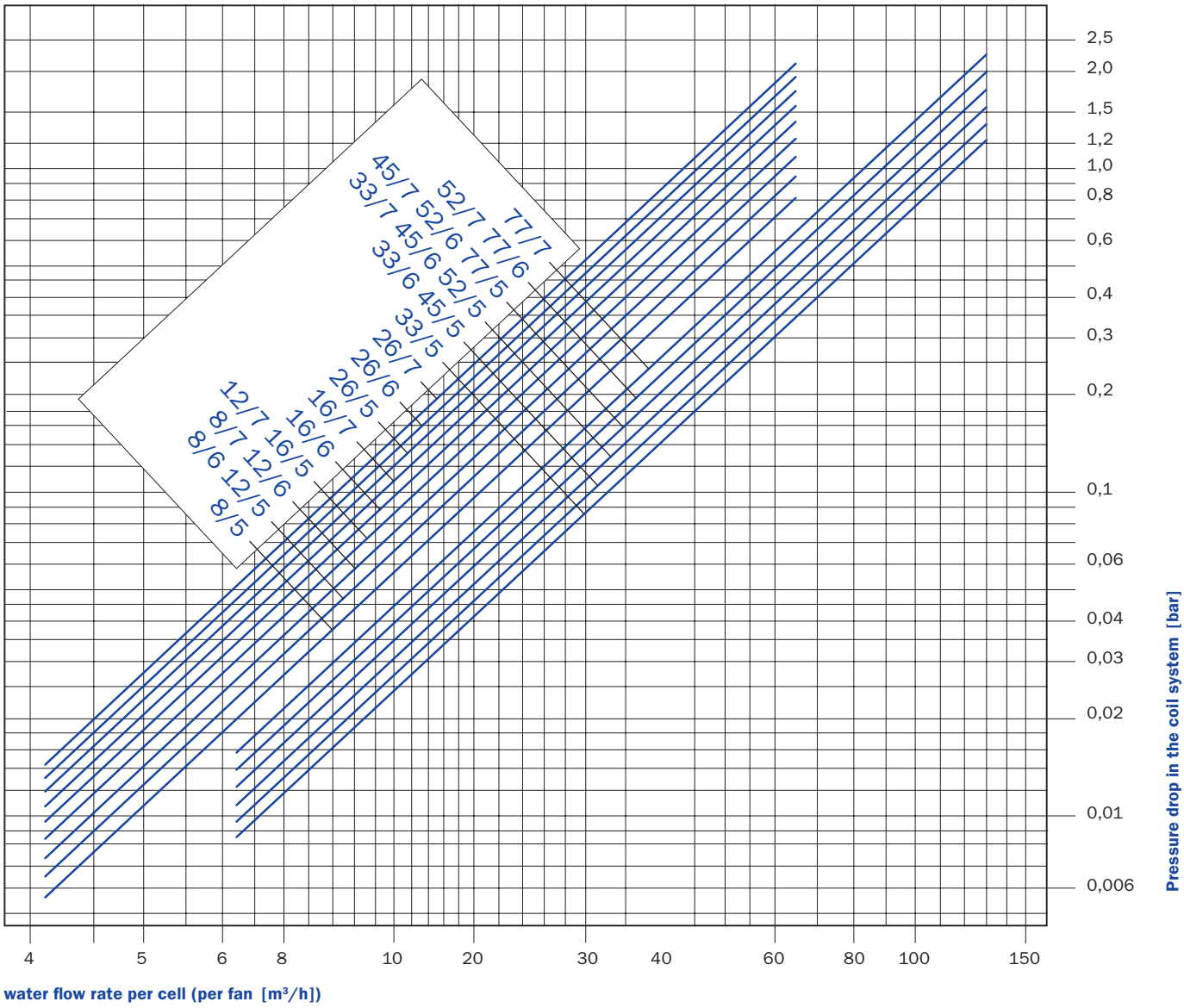

Operation of the unit during the winter

Suggestion 1

Primary circuit: Ethylene Glycol 35 weight %.
Secondary circuit: Electrically heated.

The primary circuit is filled with a mixture of 35 % ethylene glycol-water mixture which has its freezing point at – 21,8 °C. When the unit is not in operation, and the temperature falls below + 6 °C, it is necessary to heat the water for the secondary circuit in the pan electrically.
The fresh make-up water supply is outfitted with a thermostatically controlled supplementary heating cable. No air cooled operation and no water spray without fan operation.

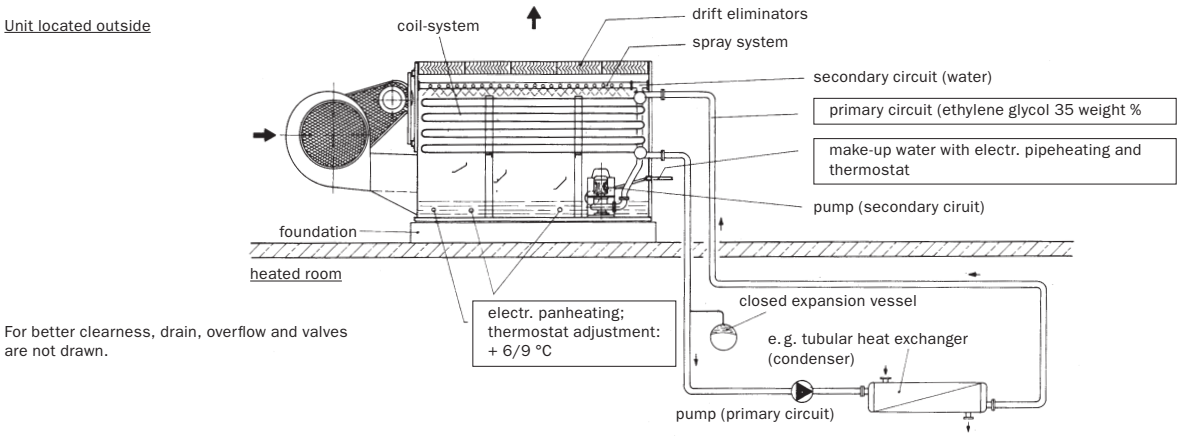

Suggestion 2

Primary circuit: The air inlet- and outlet-openings are being closed by air dampers.
An electric pan heating system keeps the interior of the unit housing free of frost.
Secondary circuit: Heated electrically.

The self-acting inlet air damper, located in the fan diffuser, will close when the fan shut down.
The air discharge damper, located in the cross section of outlet, will close when the water in the primary circuit gets too cold, in spite of shut down of the fans and pump of the secondary circuit. The controls may be set in such a way that the air discharge damper will always close when the fans and the pump of the secondary circuit are not operating. The fan starts up only when the air discharge damper is open. The auxillary contacts on the servo-motors make this kind of operation possible. The reinforced electric pan heating is sufficient to keep the interior of the unit, as well as the coil system, free of frost. A safety thermostat switch-on a safety alarm device or the pump of the primary circuit if the temperature falls below + 4,5 °C. In that case additional heat from a condenser or a add-on heating is necessary. The probe of the thermostat is installed into the top heater of the coil system.
The outside water pipes are outfitted with supplementarey electrical heating cables. No air cooled operation.

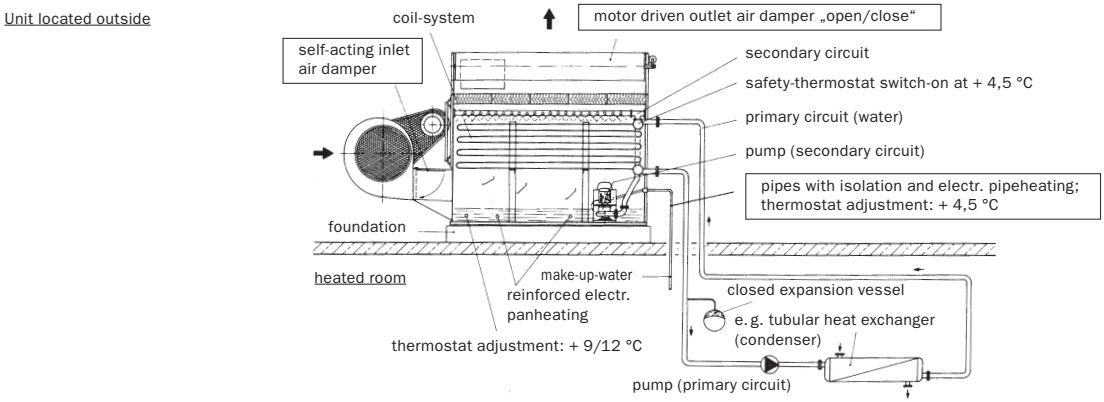

Example List of Accessories for Unit 77/6

1	Evaporative cooler for closed circuit	77/6
1	E-motor 1500 min^{-1}	15 kW
1	Pump for secondary circuit	2,2 kW
3	Immersion heater for pan heating 100 % reinforced	each 2 kW
1	Thermostat for pan heating (set to + 9 °C)	fixed switching differential 3 K
1	Self-acting open-close inlet air damper	
1	Electrically operated open-close discharge air damper	3,5 VA/230 V servo motor with auxillary contacts
1	Ball valve	R $^3/_4$ “
2	Flanges for water inlet and outlet	DN 100
2	Weding neck flanges for water inlet and outlet	DN 100
1	Weding neck flange for overflow	DN 65
6	Spray room inspection doors on both sides of the unit	
1	Safety thermostat for safety alarm contact against non-freezing set thermostat to + 4,5 °C (fixed switching differential 1,5 K)	

Air cooled operation (without water spraying)

We recommend by this mode of operation that the fan motor should be selected 15 % to 20 % larger, than the indicated absorbed power of the fan (because the unit operates without the pressure of the spraying).
By air cooled operation at ambient temperatures below 0 °C please note remarks in the assessories list (heating of waterpan, spiral heating coil).

Capacity control may be achieved by different means:
- The fan is shut off. The capacity drops to approx. 15 %. Please compare comments on page 19.
- The pump is shut off. The unit operates as air-cooled cooler without water consumption. We recommend this mode of operation in cases where the pump is not frequentely swiched on and off and where the water of the secondary circuit does not cause deposits. The coil-system becomes dry during shut-offs, encouraging mineral deposits of the water to cling to its surface, thus contributing to the scaling of the coil-system.

Selection curve 4

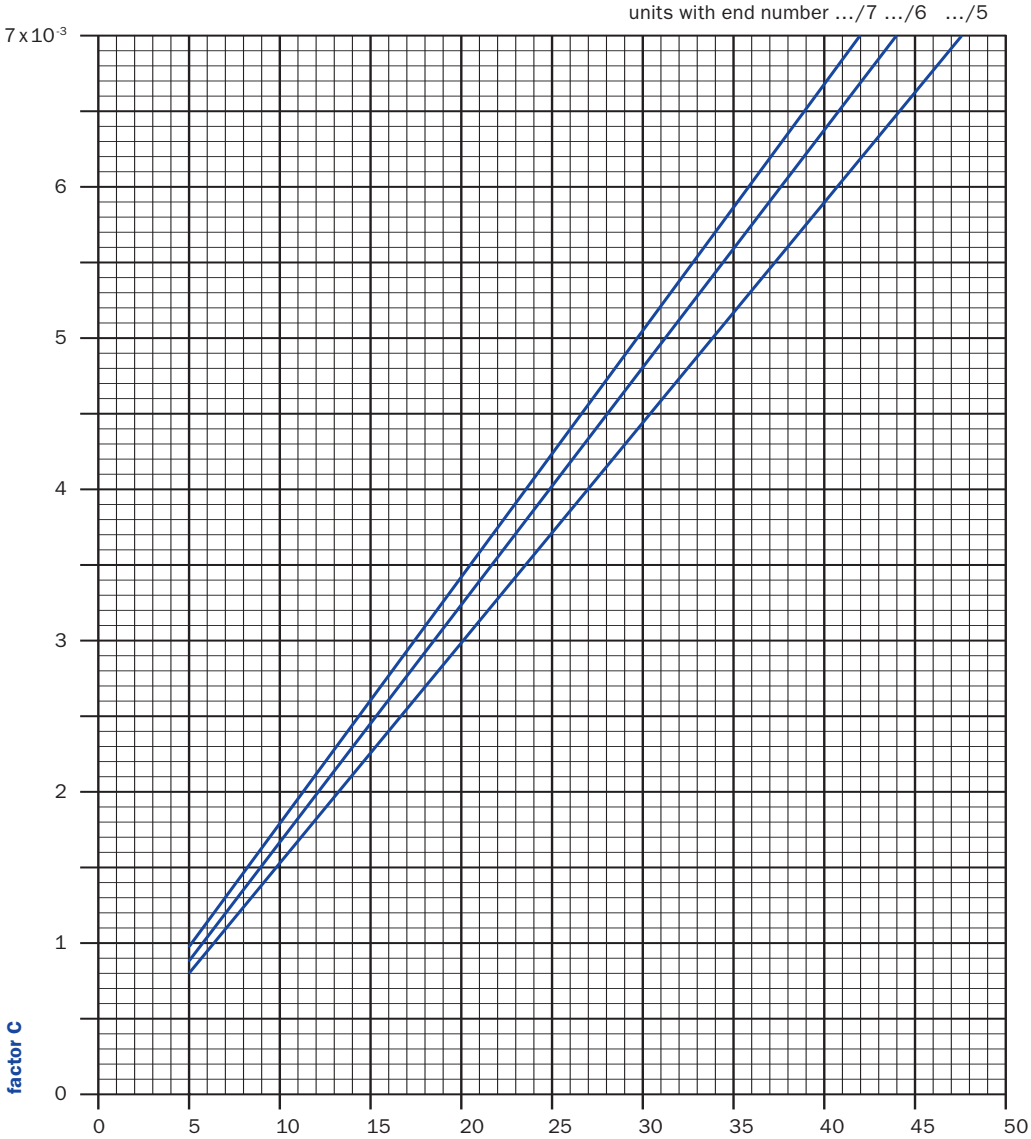

It is not taken into account whether the unit operates with water or any mixture of water and glycol

Rule: Q = C · V [kW]
V [m³/h]

Difference = average water temperature – ambient air temperature [K]

Example

The unit 33/6 is operated at an ambient air temperature of + 5 °C without spraying. The water inlet temperature is 33 °C, the water outlet temperature is 27 °C. How large is the cooling capacity?

Average water temperature:	30 °C
Difference of temperature:	30-5 = 25 K
Factor C according to selection curve 4 for units with end number 6	$4{,}0 \cdot 10^{-3} = 0{,}004$
V (air volume of the unit in m³/h):	20600

Q = C · V = 0,004 · 20600 = 82,4 kW

Technical Specification

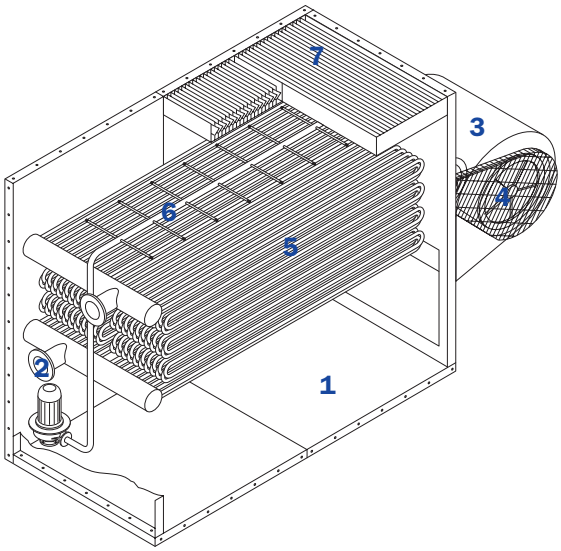

Technical Data

Evaporative cooler for closed circuit, type

Cooling capacity	kW
Water inlet temperature	°C
Water oultlet temperature	°C
Ambient wet-bulb temperature	°C
Primary water circuit flow rate	m^3/h
Primary water pressure drop (coil-system)	bar
Surface area of coil-system	m^2
Fresh water consumption by evaporation	m^3/h
Recommended allowance for bleed water: 20 – 100 % of the fresh water consumption by evaporation, depending upon the nature of the water	m^3/h
Additional static pressure for the fan	Pa
Air volume	m^3/h
Fan speed	min^{-1}
Fan power, absorbed	kW
Three-phase fan motor, one speed, 230/400 V or 400/690 V, 50 Hz or Three-phase two speed motor 400 V, 50 Hz, Dahlander circuit	kW
Motor speed	min^{-1}
Shipping weight	kg
Operated weight at a water level of 180 mm in the unit	kg
Dimension lenght/width/height	mm
Noise at 3 m horizontally in extension of the fan shaft, with free acousitic propagation	dB(A)

The supply should comply with the following conditions:
Unit completely assembled or broken down into individual components.

The supply should consist of:

1 Casing and pan section
The casing and pan section form one unit and consist of heavy-gaupge galvanised, folded sheet metal panels, which are assembled into a box structure, using stainless steel bolts and a permanently flexible sealing compound. Galvanised steel beams carry the coil. Deflector plates distribute the air uniformly over the coil. An inspection door provides access for adjustment of eventual available armatures and for cleaning of the pan section.

2 Water Connections for the secondary circuit
All plastic coated water connections fitted to the unit, are provided with flanges, PN 16 DIN 2633. The galvanised make up water and plastic coated drain connections have internal threads.

Strainer
The plastic coated strainer which has a mesh size of about 5 mm is attached to the pump. Casing in such a way that it can be removed through the inspection door.

Combined overflow-/bleed-device
A special galvanised tray provided with an adjustable cover and situatied in the spray area, discharges the required quantity of bleed water directly through the overflow. By using of a separate bleed device the cooling tower will be provided with an overflow instead of a combined overflow and a bleed device.

3 Double width double inlet centrifugal fans
Low noise level high efficiency, heavy duty fans, with forward-curved blades are used. The galvanised fan impeller is statically and dynamically balanced. The fan shaft is made of stainless steel X 20 Cr 13, material-no. 1.4021. The feather is made of steel C 45 K according to DIN 6885. The heavy duty ball bearings which are assembled in pillow blocks and equipped with lip or labyrinth seals, are provided with grease nipples led to the end of the fan housing for maintenance ease. The fan housing is made of galvanised steel and equipped with an outlet diffuser. The drive is via V-belts. The V-belt pulleys are of cast aluminium with steel hubs. The fan is located in the dry entering air and is readily accessible for maintenance purposes.

4 Belt guard and air intake
The guards are hot dipped galvanised after fabrication. By using of a fan enclosure the guards will not be needed.

5 Coil-system
The coil is made of steel tube of approx. 2,3 mm wall-thickness and is fully hot-dip galvanised after manufacture. It is drainable and has special headers in order to ensure unimpeded discharge of the water. The minimum pitch between the tubes is about 28 mm. The water connections are without flanges. The coil is carefully cleaned after manufacture and subjected to an air pressure test according to DIN 8975.

6 Spray system
The water is sprayed through self-cleaning, non clogging, hollow cone, spray nozzles made of anti-fouling fibreglass reinforced nylon.
At a supply pressure the spray nozzles, produce a fine water spray and, because of their arrangement, ensure uniform water distribution.
The spray branches and the main header are made of galvanised steel tube DIN 2440.

7 Moisture eliminators
The moisture eliminators are made of synthetic material for optimum water elimination at a low pressure drop. In the upper part of the eliminators the air directed vertically upwards.

Corrosion protection
All galv. sheet metal parts are lightly sandblasted, heated in a furnace, and dipped into a plastic powder bed (Performance Polymer Alloy).
The plastic coat is approx. 0,3 mm thick on each side. It has a homogeneous surface, it is elastic, resistant to chemical attack, light- and weatherresistant. (Not coated are: eliminators, fan wheel incl. shaft and pulleys, spray system, bolts and nuts, and all parts which are not hot dipped galvanised.)

Accessories: The accessories are described at a separate brochure.

Installation and Operating Instructions

Noise Level
The values indicated in dB(A) relate to a measurement taken 3 m in horizontal extension of the fan shaft (maximum noise development). Although the forward-curved fan impellers of the larger units, have been designed by a reputable company and are selected to operate at a particularly low noise level at high efficiency, the dB(A) values must be considered as guide values because the installation conditions (accoustic reflection from the walls of buildings etc.), vary widely.

Cooling performance with centrifugal fans drive by two speed motors
When the speed changing 1500 rpm to 750 rpm, the cooling performance drops off to about 55 %. If the fan is switched off, the cooling performence is about 15 %. If the fan is shut off and the unit operates with spraying we recommend to provide the unit with self-acting inlet dampers, to prevent recirculation of saturated discharge air through the fan. If the spray is frequentely shut on and off the coil-system becomes dry during shut-offs, encouraging uprated deposits of the water on its surface.
If the dampers are closed the cooling performance is about 7 %. Fan motors should be selected about 10 % larger than the indicated absorbed power of the fan. The maximum size for all motors is: 200 L, maximum, however 320 kg.

Standard-Units with two fan motors
Units with 4, 5 and 6 fans supplied with two fan motors which must be switched on and off together. In case that the fan motors should operate separately we need two units which are assembled to one cooling tower (Example: 1 x 4/77/5 → 2 x 2/77/5) or we need an air dividing wall.
If the unit is provided with an air dividing wall the fan motors at the left and right side can be switched on and off separately.

Test and working pressure for the coil system
Test pressure: 15 bar; Working pressure: allowed max. 10 bar.

Accessories
The following accessories are described in our brochure „accessories“ and may be order at an additional charge: One and two speed fan motors, or motors which can be used for frequency modulation, inlet and discharge dampers, air discharge plenums, inspection duct, pan heating, electrical switch boards, float valves and switches, water tanks, silencers, fan enclosures, air discharge venturies, flexible duct connectors, spring type anti vibration mountings, neoprene rubber strips, support beams, top in – top out arrangements etc.

Important instructions
1. We recommend the use only those types of foundation which are in accordance with our suggestions. All foundations for our units (including enclosures) installed outdoors should be made water tight. When erecting the unit in buildings both the foundation and the floor should be made water tight designed as a pan is to be addistionally recommended. A jointing solution could be added to the concrete, or a waterproof coat of paint may be applied. Also possible is the use of sheet or plastic covers.
2. Load deflection of the support beams under the unit over the entire length: Maximum value: Overall length/400.
   Maximum value when using the longitudinal sound absorbing hinges or neoprene rubber strips: Overall length/600.
3. Acceptable deviation of installation position of the unit with regard to the horizontal: Maximum value: 5 mm pro 3 m housing length.
4. Units with two or more fan-motors. These units have one common water basin. All motors must be operated simultaneously.
   A time delay of max. 10 sec. is permissable.
5. Units which might tilt must be anchored to the foundation. This applies in particular to all those equipments having a low width as compared to their overall height (exhaust duct connecting pieces to be considered!) as well as to equipment having a large wind surface.
6. We recommend inspection doors for spray nozzles or a duct piece with inspection door above the unit, if eliminators and the spray system are not accessible freely from above.
7. Pipelines and collectors/distributors on the part of the builder may not capacitate the plant connections and shall therefore be supported or hung on the builder’s part. Furthermore, there may be no horizontal or vertical deviation between these pipelines and the plant connections so that assembly free of tension is ensured.
8. When ordering the omega spring rails or neoprene rubber strips, the direction of the foundations must be given. However, a prerequisite for an efficient sound absorbing effect is that rigid tube connections are adjusted by means of compensators.
9. Please note in the special case the respective instructions in our confirmation of order.

Fresh water supply and consumption for the secondary circuit
The limiting value for the quality of make-up water and the bleed-off water should be adjusted that the limiting value for the quality of blowdown water according VDI 3803 table 10 may be exceded. Fresh water consumption includes quantity of water evapored and quantity of water bleed-off.
For a cooling performance of 1 kW evapored 1,49 kg/h blowdown water of the secondary circuit. The consumption of bleed-off water depending upon the usen thickening factor (Ez = 5 to 1,5) approx. 25 % to 200 % of the water consumption by evaporation.
Required water pressure at the fresh water inlet should be 1,0 to 1,5 bar. A pressure reducing valve will be recommended, it should be placed before the fresh water inlet valve. The fresh water pipe connection is neutralzed by a rubber hose. By using of plastic pipe connection take the suitable fixing.

Necessary amount of heat in order to prevent freezing in the coil-system
Example:
To prevent freezing in the coil-system (without accessories e.g. finned heat exchanger) for unit 77/5 we need the amount of heat: Approximate value for minimum water-outlet temperature 10 °C and minimum water flow rate according to table 1 and if the secondary pump is shut off

at – 18 °C ambient air dry bulb temperature:	with fan shut of and without air dampers:	approx. 35 kW
	at closed inlet air dampers:	approx. 25 kW
	at closed inlet and outlet air damper:	approx. 15 kW
at – 10 °C ambient air dry bulb temperature:	the amount of heat is 25 % lower.	

Minimum water outlet temperature
By operation with water spray and outside air temperatures lower 0 °C: 14 °C (in special cases see techn. report H9).

Operating with intermediate water tank
When the unit will be opereted with an intermediate water tank so the coil-system will be frequently trained.
In order to avoid corrosive action in the coil-system an agent for corrosion protection for the primary circuit should be used.

Possibilities of delivery
1. All units can be supplied broken down. Assembly is carried out on site. The coil is the largest and heaviest component. A crane will be required to unload the components and to position the coil after assembly of the unit casing.
2. The units can be supplied assembled and ready for operation, in sizes 8/5 up to including 2/77/7. A crane is required just once to position the unit from the lorry on the prepared foundation. There are no cost for assembly of the unit.

Special Design Features

Design

1 Blow-through closed circuit coolers. The fans are located in the dry entering air and not in the corrosive saturated discharge air.
2 Recirculations of air is not possible with this design.
3 Pressure chamber. The fans discharge the air into a pressure chamber where an intensive heat exchange takes place between air and water.
4 The units can be completely disassembled, because all the components are bolted.
5 Simple connection of discharge ducting because an all-round flangs is provided at the discharge side.
6 Simple assembly if assembly on site is to be carried out, because of the compact rectangular design.
7 Compact construction with particularly low equipment height and low weight.
8 The large water quantity in the pan facilitates piping layout.
9 Units with air in and air out at the top. All units of this bulletin can be supplied with this disign. This model offers advantages over other models when erected indoors and outdoors. Please see our spec. bulletin for units with air in and air out at the top.

Construction

1 Corrosion protection. All galv. sheet metal parts are lightly sandblasted, heated in a furnace, and dipped into a plastic powder bed. The plastic coat is approx 0,3 mm thick on each side. It has a homogeneous surface, it is elastic, resistant to chemical attack, light- and weatherresistant. (Not coated are: eliminators, fan wheel incl. shaft and pulleys, spray system, bolts and nuts, and all parts which are not hot dipped galvanised.)
2 Bleed-off water device. By adjustment of the cover of a small collector tray arranged in the unit, the quantity of bleed-off water leaving the overflow can be regulated.

Operation

1 No water carry over, due to the use of excellent eliminators in association with a low air discharge velocity. The air leaves the unit underflected, straight upwards.
2 The closed design ensures trouble-free winter operation. Spraying of water over the side of the unit, with subsequent ice formation, does not occur. By using a transformation section the fans are located far enough away from the unit to prevent ice formation on the fan impellers.
3 Coned, non-clogging self cleaning spray nozzles of fibreglass-reinforced nylon, produce a fine water spray at a low pressure.

Maintenance

1 Because of the low installed height, the units are easily accessible for maintenance.
2 The pitch between the tubes of the coils is 28 mm so that there is no risk of clogging under normal operating conditions.
3 Biological photogenesis (algae) is prevented because only very little light can penetrate into the intrior of the unit. The wholly galvanised steel construction forms a poor breeding ground for biological growth.
4 A large number of trained representatives all over Europe provide an effective and first class after sales service.

Noise

1 Units employing centrifugal fans, are inherently quiet. The forward curved blades of the fan impellers enable a low rpm to be used. Because of the considerable pressure available, silencers, etc. can be fitted to the unit.
2 Because of the closed construction, the water splash noises are considerably less than in open industrial type cooling towers.

The manufactures reserve the right to make technical modifications as a result of further development and technical advances.